# RT930 Treadmill

## Owner's Manual

18Q

**CAUTION!** Read all precautions and instructions in this manual before using this equipment.

**! CAUTION**
Read all precautions and instructions in this manual before using this equipment.

## Table Of Contents


Important Safety Instructions---------- 3

Before You Start---------- 6

Main Parts List---------- 7

Warning---------- 8

Using Method---------- 9

Warm Up Exercises---------- 10

Power Requirements---------- 11

Console Information---------- 12

Moving Instructions---------- 13

Parts List and Exploded View---------- 14

Console Panel Functions---------- 32

Troubleshooting Guide---------- 54

Electrical Connection---------- 55

Belt Adjustment and Maintenance---------- 56

Maintenance Check List---------- 58

## IMPORTANT SAFETY INSTRUCTIONS

When using an electrical appliance, basic precautions should always be followed, including the following:
Read all instructions before using this Treadmill:

**DANGER -** To reduce the risk of electric shock:

1. Always unplug this appliance from the electrical outlet immediately after using and before cleaning.
2. Do not reach for a plug that has fallen into water. Unplug immediately.
3. Do not use while bathing or in a shower.
4. Do not place or store the treadmill where it can fall or be pulled into a tub or sink. Do not place in or drop into water or other liquid.

**WARNING -** Heart rate monitoring systems may be inaccurate. Over exercising may result in serious injury or death. If you feel faint stop exercising immediately.

**WARNING -** To reduce the risk of burns, fire, electric shock, or injury to persons:

1. An appliance should never be left unattended when plugged in. Unplug from outlet when not in use, and before putting on or taking off parts.
2. Do not operate under blanket or pillow. Excessive heating can occur and cause fire, electric shock, or injury to users.
3. Close supervision is necessary when this treadmill is used by, on, or near children, invalids, or disabled persons. Keep children away from extended back, foot support (or other similar parts).
4. Use this treadmill only for its intended use as described in this manual. Do not use attachments not recommended by the manufacturer.
5. Never operate this treadmill if it has a damaged cord or plug, if it is not working properly, if it has been dropped or damaged, or dropped into water. Return the Treadmill to a service center for examination and repair.
6. Do not carry this treadmill by supply cord or use cord as a handle.
7. Keep the cord away from heated surfaces.
8. Never operate the treadmill with the air openings blocked. Keep the air openings free of lint, hair, and the like. Never operate on a soft surface such as a bed or couch where the air openings may be blocked.

9. Never drop or insert any object into any opening.
10. Do not use outdoors.
11. Do not operate where aerosol (spray) products are being used or where oxygen is being administered.
12. To disconnect, turn all controls to the off position, then remove plug from outlet.
13. Connect this Treadmill to a properly grounded outlet only. See Grounding Instructions.
14. The equipment is designed for commercial use.
15. The product should only be used on a level surface and is with 1x2 meters space around the product.

## SAVE THESE INSTRUCTIONS

## GROUNDING INSTRUCTION

This product must be grounded. If it should malfunction or breakdown, grounding provides a path of least resistance for electric current to reduce the risk of electric shock. This product is equipped with a cord having an equipment-grounding conductor and a grounding plug. The plug must be plugged into an appropriate outlet that is properly installed and grounded in accordance with all local codes and ordinances.

**DANGER -** Improper connection of the equipment-grounding conductor can result in a risk of electric shock. Check with a qualified electrician or serviceman if you are in doubt as to whether the product is properly grounded. Do not modify the plug provided with the product - if it will not fit the outlet, have a proper outlet installed by a qualified electrician.

This product is rated more than 15 amperes and is for use on a circuit having a nominal rating of 120 volts and is factory-equipped with a specific electric cord and plug to permit connection to a proper electric circuit. Make sure that the product is connected to an outlet having the same configuration as the plug. No adapter should be used with this product. If the product must be reconnected for use on a different type of electric circuit, the reconnection should be made by qualified service personnel.

# Important Safety Instructions

**CAUTION -** Risk of Injury to Persons - To Avoid Injury, use extreme caution when stepping onto or off of a moving belt. Read Instruction Manual Before Using.

**ATTENTION -** Risque des blessures aux personnes - Pour éviter des blessures, avec une extrême prudence en marchant sur ou hors d'une ceinture mobile. Lisez le manuel d'instruction avant utilisation.

**CAUTION -** To Reduce The Risk Of Injury From Moving Parts - Unplug Before Servicing.

**ATTENTION -** Pour réduire le risque de plessures des pièces mobiles - Débranchez avant l'entretien.

**WARNING -** To Reduce the Risk of Electric Shock - Unplug Before Cleaning or Servicing.

**AVERTISSEMENT -** Pour réduire le risque du choc électrique - Uébranchez avant le nettoyage ou l'entretien.

This appliance can be used by children aged from 8 years and above and persons with reduced physical, sensory or mental capabilities or lack of experience and knowledge if they have been given supervision or instruction concerning use of the appliance in a safe way and understand the hazards involved. Children shall not play with the appliance. Cleaning and user maintenance shall not be made by children without supervision.
the appliance shall be disconnected from its power source during service and when replacing parts and, if that the removal of the plug is foreseen, it shall be clearly indicated that the removal of the plug has to be such that an operator can check from any of the points to which he has access that the plug remains removed.

# Before You Start

**Remember to take the time to review owner's manuals before you start.**

1. Before using this treadmill or starting any exercise program, consult your physician and accompanied by specialized person. Adjust the speed not over 8KMH.
2. Take the time to perform the stretching exercise provided to avoid injury.
3. If you have heart problems, and/ or the other diseases, do not use the treadmill programs without receiving approval from your physician.
4. Stop exercising or call physician if you feel uncomfortable.
5. Do not leave children unsupervised and disabled person near or on the treadmill. Should be accompanied by supervisors.
6. Running is oxygen exercise, recommended 30 minutes per time is reasonable.
7. Wear comfortable, good-quality walking or running shoes and appropriate clothing. Do not with fibre clothing to avoid electrical shock and damage the treadmill.
8. Do note us the treadmill with bare feet, sandals, socks of stockings to avoid any risk of injuries. Wear comfortable shoes or cotton socks.
9. Failure to follow these instructions will void the treadmill warranty.
10. If the supply cord is damaged, it must be replaced by the manufacturer or its service agent or a similarly qualified person in order to avoid a hazard.

## Training Area and Free Area

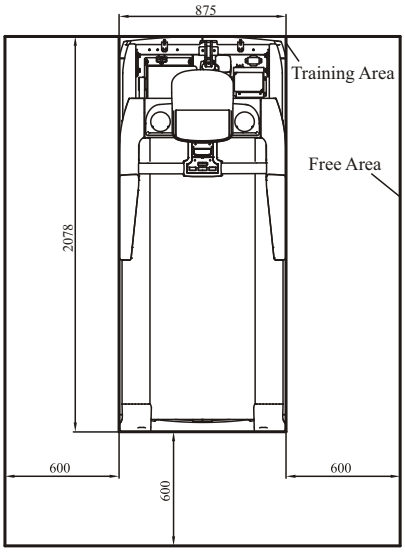


### Specifications

Class: SB
Maximum User Weight: 150kg/ 330lbs
Product Total Surface: 2078*875 mm
Product Total Mass: 205.8kg/ 454lbs
Noise around the treadmill using.
Noise emission under load is higher than without load.

# Main Parts List

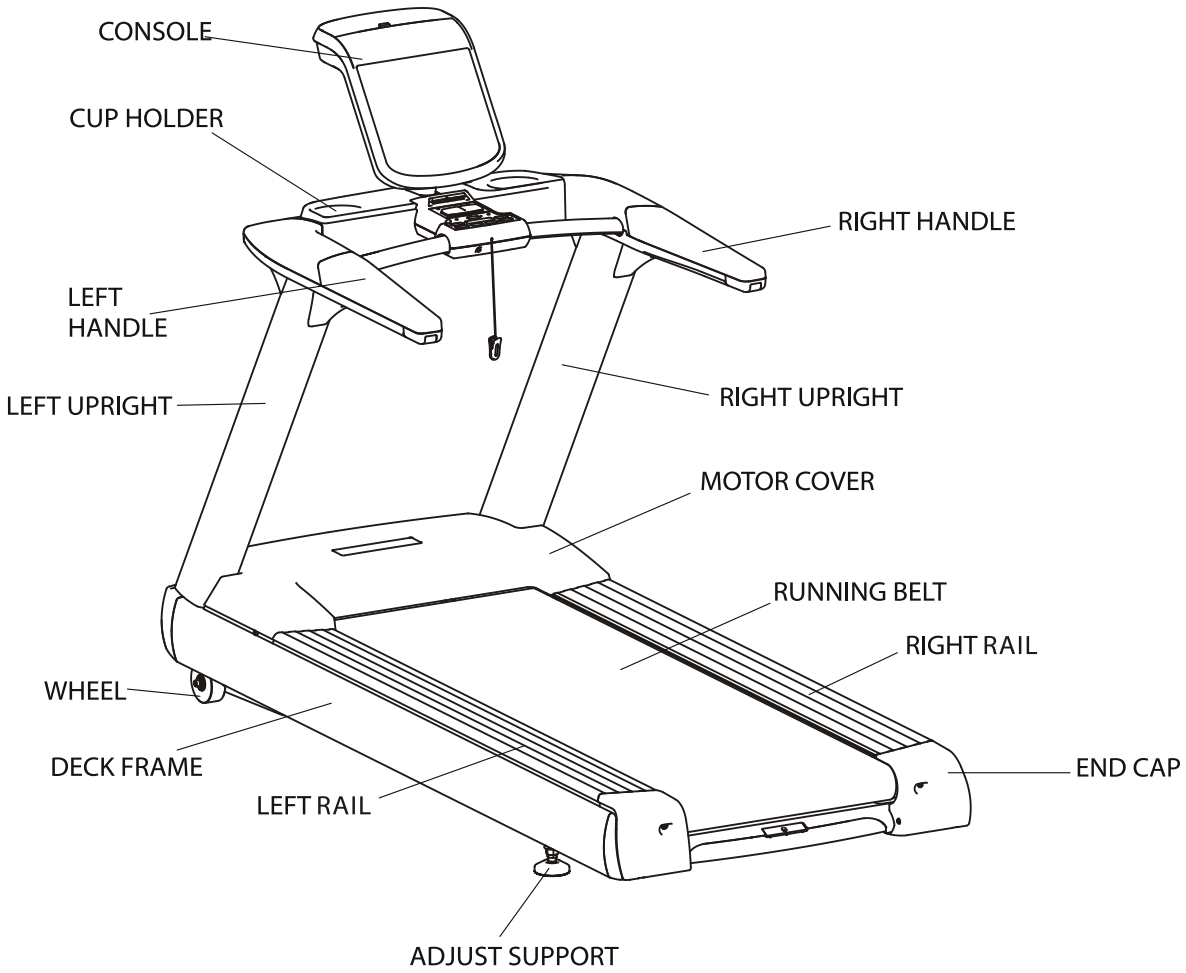

## Warning

Before using this treadmill or starting any exercise program, It is important to review this manual and the following precautions.

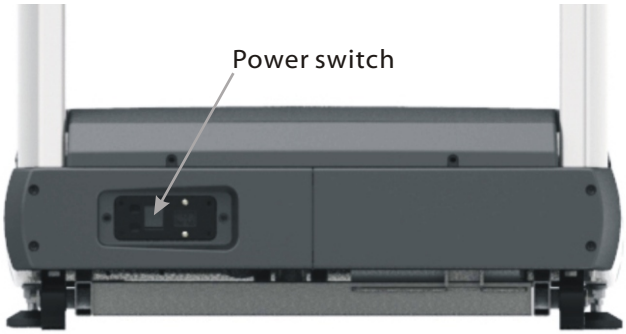


## WARNING

1. Always unplug the treadmill after using to keep the life of treadmill and avoid any risk of injuries.
2. In order to protecting your treadmill, spattering water on the machine must be forbidden.

## Adjustment Machine

If the ground in user's house is not level, please adjust the adjust support properly which is marked as A in the below figure to make the machine at a leveled place. After adjusting tighten the hex nut by using the double-ended spanner.

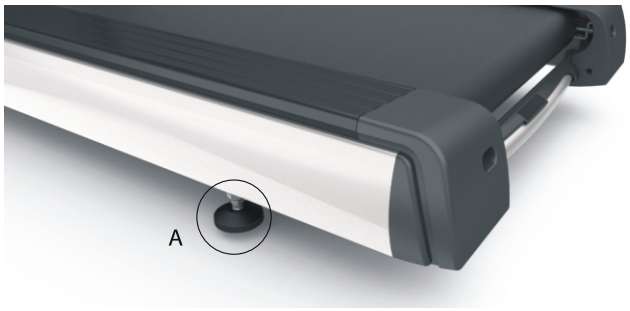

# Using Method

**Please read carefully and using follow the functions:**

1. put the plug in the socket, turn on the switch.
2. grasp the handle firmly, stand on the treadmill.
3. Push red safety switch into the casing, tie the safety clip to your cloth, then start the treadmill for exercise.
4. you can operate this device according as the manual set the lowest speed, first then increase the speed gradually.
5. you should grasp the handle firmly by one hand, when you operating the console.
6. Take care to use treadmill. Start from low speed handed to the uprights leaving from treadmill after reducing speed and stopping all functions.
7. Haul the Safety clip linked with red wire on emergency.
8. Keep warm and relax your body after workout.

Exercise time and exercise frequency at a time:
Exercise time: 30minuates----Normal;
Exercise frequency: Warm your body by 10---20minutes under 8Kph,
then increase speed accordingly.

**Safety Switch Introduction**

When the treadmill is running, the user can press the stop switch directly if he wants to stop it. Then the treadmill will stop slowly. If the user encounters emergency when he using the treadmill he should haul the safety clip linked with red wire, it will triger the safety switch to step.

**Warning:** When use above methed to stop running, the running belt will last running for several seconds before completely stop.

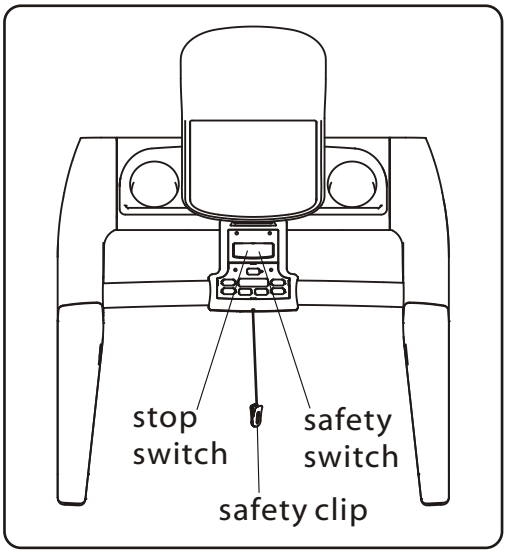

# Warm Up Exercises

**EXERCISE GUIDELINES**

WARNING! Before beginning this or any exercise program, you should consult your physician. This is especially important for individuals over the age of 35 or individuals with pre-existing health problems.

Warming up prepares the body for the exercise by increasing circulation, supplying more oxygen to the muscles and raising body temperature. Begin each workout with 5 to 10 minutes of stretching and light exercise to warm up. The photos on this page show several forms of basic stretching you may perform before your workouts. In order to achieve an adequate warm-up, perform each stretch three times.

**TOE TOUCH STRETCH**

Stand, bending your knees slightly and slowly bend forward from your hips. Allow your back and shoulders to relax as you reach down toward your toes as far as possible. Hold for 15 counts, then relax. This will stretch your hamstrings, back of knees, and back.

**HAMSTRING STRETCH**

Sit with one leg extended. Bring the sole of the opposite foot toward you and rest it against the inner thigh of your extended leg. Reach toward your toes as far as possible. Hold for 15 counts, then relax. This will stretch your hamstrings, lower back, and groin.

**CALF/ACHILLES STRETCH**

With one leg in front of the other, reach forward and place your hands against a wall. Keep your back leg straight and your back foot flat on the floor. Bend your front leg, lean forward and move your hips toward the wall. Hold for 15 counts, then relax. To cause further stretching of the Achilles tendon, bend your back leg as well. This will stretch your calves, Achilles tendons, and ankles.

**QUADRICEPS STRETCH**

With one hand against a wall for balance, reach back and grasp one foot with your other hand. Bring your heel as close to your buttocks as possible. Hold for 15 counts, then relax. This will stretch your quadriceps and hip muscles.

**INNER THIGH STRETCH**

Sit with the soles of your feet together and your knees outward. Pull your feet toward your groin area as far as possible. Hold for 15 counts, then relax. This will stretch your quadriceps and hip muscles.

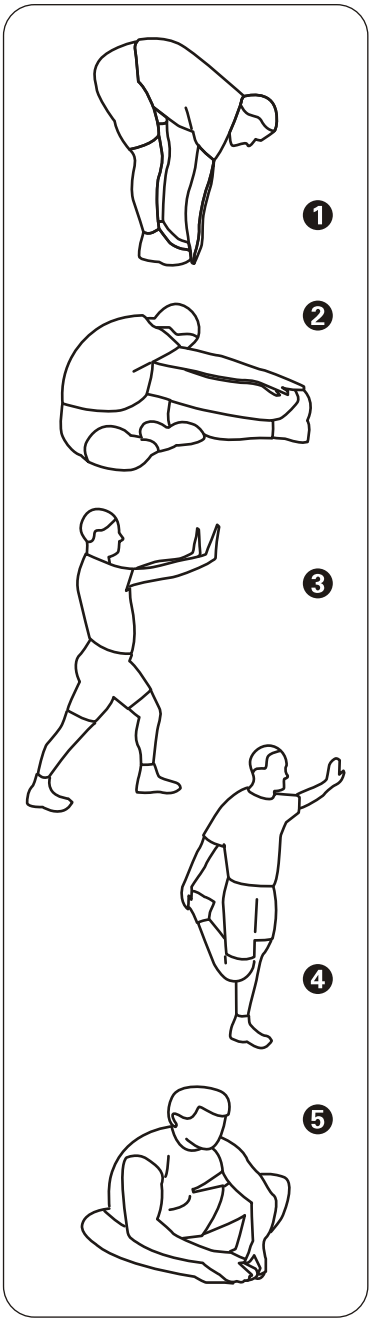

## Power Requirements

**IMPROPER CONNECTION OF THE EQUIPMENT GROUNDING CONNECTOR CAN RESULT IN A RISK OF AN ELECTRIC SHOCK. CHECK WITH A QUALIFIED ELECTRICIAN OR SERVICE MAN IF YOU ARE IN DOUBT AS TO WHETHER THE PRODUCT IS PROPERLY GROUNDED. DO NOT MODIFY THE PLUG PROVIDED WITH THE PRODUCT. IF PLUG WILL NOT FIT THE OUTLET, HAVE A PROPER OUTLET INSTALLED BY A QUALIFIED ELECTRICIAN.**

This treadmill can be seriously damaged by sudden voltage changes in your home's electrical power. Voltage spikes, surges, and noise interference can result from weather conditions or from other appliances being turned on or off.

This treadmill must be grounded to reduce the risk of electrical shock. Grounding provides a path of least resistance for electric current should the treadmill malfunction. Always plug the power cord into an appropriate outlet that is properly installed and grounded in accordance with all local codes and ordinances.

# Console Information

Before beginning your workout, check your normal resting heart rate. Place your fingers lightly against your neck, or against your wrist over the main artery. After finding your pulse, count the number of beats in 10 seconds. Multiply the number of beats by six to determine your pulse rate per minute. We recommend taking your heart rate at these times; at rest, after warming up, during your workout and two minutes into your cool down, to accurately track your progress as it relates to better fitness.

During your first several months of exercising, the AHA recommends aiming for the lower part of the target heart rate zone-60%, then gradually pro-gressing up to 75%. According to the AHA, exercising above 75% of your maximum heart rate may be too strenuous unless you are in top physical condition. Exercising below 60% of your maximum will result in minimal cardiovascular conditioning.

Check your pulse recovery rate – If your pulse is over 100 bpm five minutes after you stop exercising, or if it's higher than normal the morning after exercising, your exertion may have been too strenuous for your current fitness level. Rest and reduce the intensity next time.

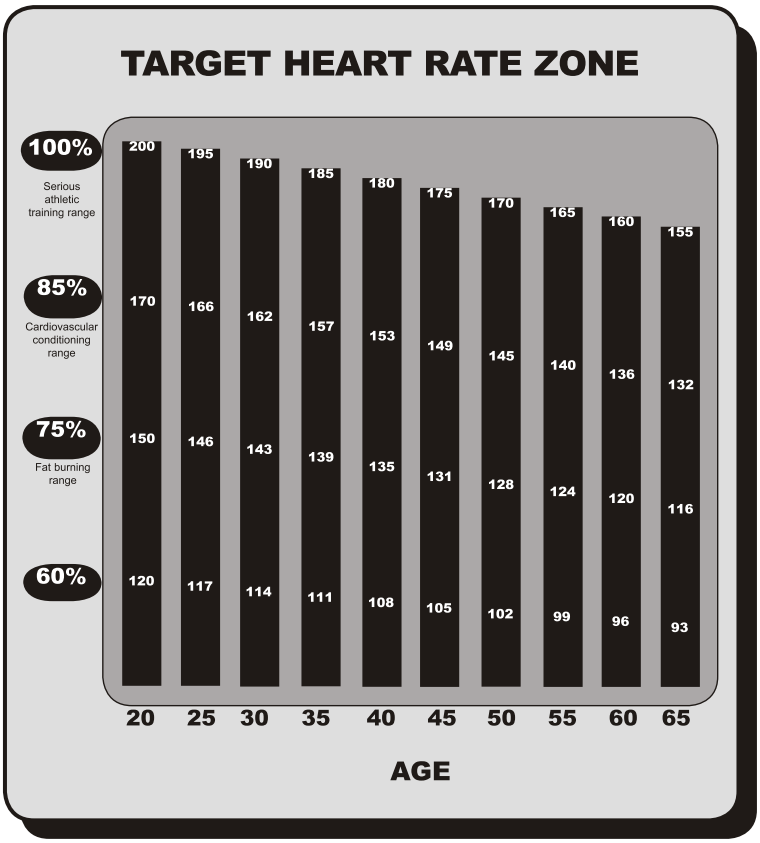


**Fitness Safety** The target heart rate chart indicates average rate zones for different ages. A variety of different factors (including medication, emotional state, temperature and other conditions) can affect the target heart rate zone that is best for you. Your physician or health care professional can help you determine the exercise intensity that is appropriate for your age and condition.

# Moving Instructions

**Caution!** To avoid the risk of injury, never attempt to move the treadmill while it is operating. To reduce the possibility of injury while lifting, bend your legs and keep your back straight. As you raise the treadmill, lift using your legs, not your back. In order to raise or lower the treadmill safely, you must be able to lift 220 pounds (100kg). It is suggested you always use the aid of a second person when moving the treadmill.

Lift the treadmill back then move it to the desired location. Carefully put down it on the position. Do not attempt to move the treadmill over an uneven or rough surface.
**Note:** The treadmill's angle can not exceed 30 degrees when lifted the treadmill back.

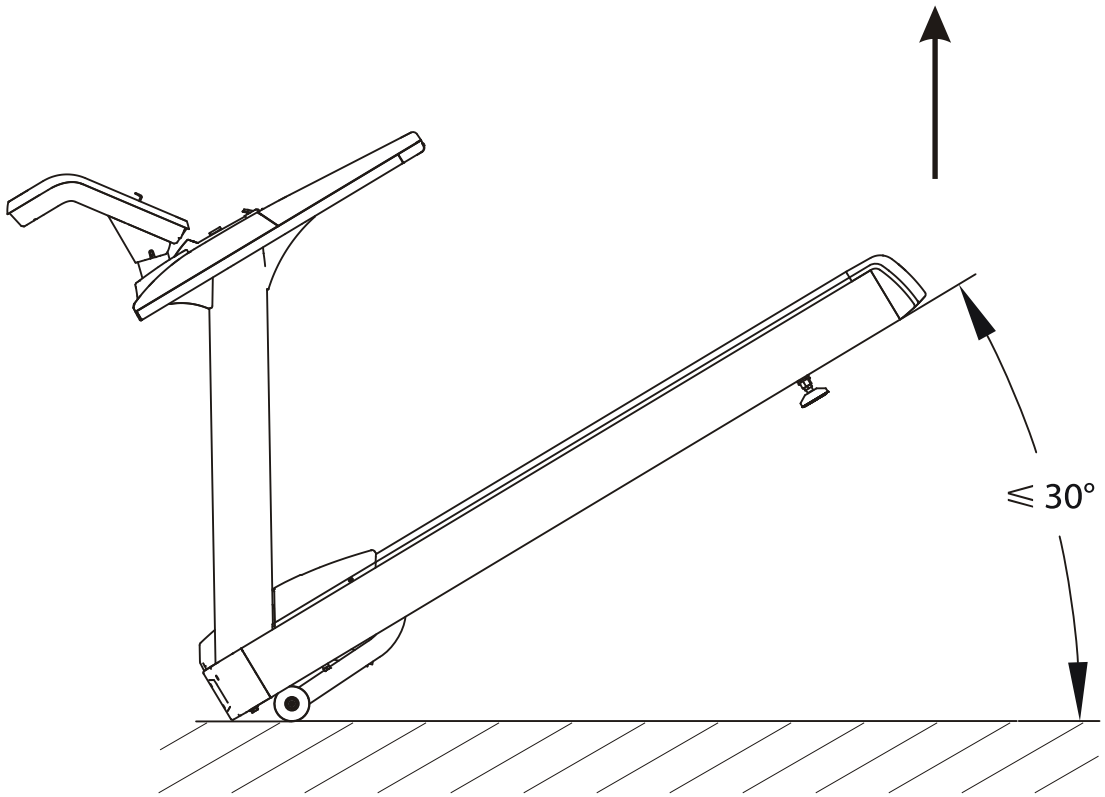

## Installation Instructions

| Item No. | Grade No. | Part No. | Description | QTY |
|---|---|---|---|---|
| 1 | 1 | RT93001ASSY | Console Frame Assembly | 1 |
| 2 | 2 | RT7000200 | Left Upright | 1 |
| 3 | 3 | RT7000300 | Right Upright | 1 |
| 4 | 4 | RT93004-22WXASSY | Mainframe | 1 |
| 5 | 4.35 | RT7002000 | Motor Cover | 1 |
| 6 | 4.50 | GB70M6*20DHS20 | Socket Head Cap Screw M6*20 | 24 |
| 7 | 7 | RT930-WXDZBASSY | Console Component | 1 |
| 8 | 8 | RT7004300 | Left Routing Cover | 1 |
| 9 | 9 | RT7004400 | Right Routing Cover | 1 |
| 10 | 10 | RT7004500 | Left Bolt Cover | 1 |
| 11 | 11 | RT7004600 | Right Bolt Cover | 1 |
| 12 | 12 | RT7006400 | Console Back Cover | 1 |
| 13 | 13 | A01-6 | Power Cable | 1 |
| 14 | 14 | AC2970C1100 | Power Cable Fixing Plate | 1 |
| 15 | 17.1 | GB818M5*15DHS20 | Phillip Screw M5*15 | 2 |
| 16 | 17.2 | GB818M5*20DS2 | Phillip Screw M5*20 | 4 |
| 17 | 4.54 | GB5780M10*165*40DS20 | Hex Head Bolt M10*165 | 2 |
| 18 | 4.56 | GB5780M10*180DHS2 | Hex Head Bolt M10*180 | 2 |
| 19 | 4.61 | L1600JD-SM-XHB-10 | Console Wire Down | 1 |
| 20 | 1.31 | L900JD-SM-VHR-10 | Console Wire Up | 1 |
| 21 | 1.29 | B108 | Switch Pcb | 1 |
| 22 | 17.3 | GB70M8*20DS20 | Socket Head Cap Screw M8*20 | 4 |
| 23 | 17.4 | DQ8DS2A | Washer $\phi$9* $\phi$22*2 | 8 |
| 24 | 17.5 | GB5781M10*25DS20 | Hex Head Bolt M10*25 | 4 |
| 25 | 17.6 | GB818M4*10DHS2 | Phillip Screw M4*10 | 2 |
| 26 | 17.7 | DQ10DS2A | Washer $\phi$11* $\phi$23*2 | 2 |
| 27 | 17.8 | GB70M8*30*30DS20 | Socket Head Cap Screw M8*30 | 4 |
| 28 | 17.9 | GB862.28N19 | Serrated lock washers $\phi$8 | 4 |
| 29 | 17.10 | GB862.210N19 | Serrated lock washers $\phi$10 | 4 |
| 30 | 17.11 | NM10DS2 | Locknut M10 | 2 |
| 31 | 4.70 | L2700HDMI-20-S | cable,for HDMI 2 | 1 |
| 32 | 4.71 | L2700RJ45-8-S | internet cable 2 | 1 |
| 33 | 4.72 | L2700XHB-SMA-6 | cable,for video 2 | 1 |
| 34 | 7.29 | L500HDMI-20-S | cable,for HDMI | 1 |
| 35 | 7.30 | L600RJ45-8-S | cable,for internet | 1 |
| 36 | 7.31 | L400XHB-SMY-6 | cable,for video | 1 |
| 37 | 7.32 | L190XHB-SMA-7 | Joint Wire 2 | 1 |
| 38 | 7.33 | L260VHR-SMA-2 | 12V power cable | 1 |
| 39 | 7.34 | L260XHB-SMA-4 | Joint Wire 1 | 1 |
| 40 | 7.35 | L300XHB-SMA-12 | Joint Wire 3 | 1 |

## Installation Instructions

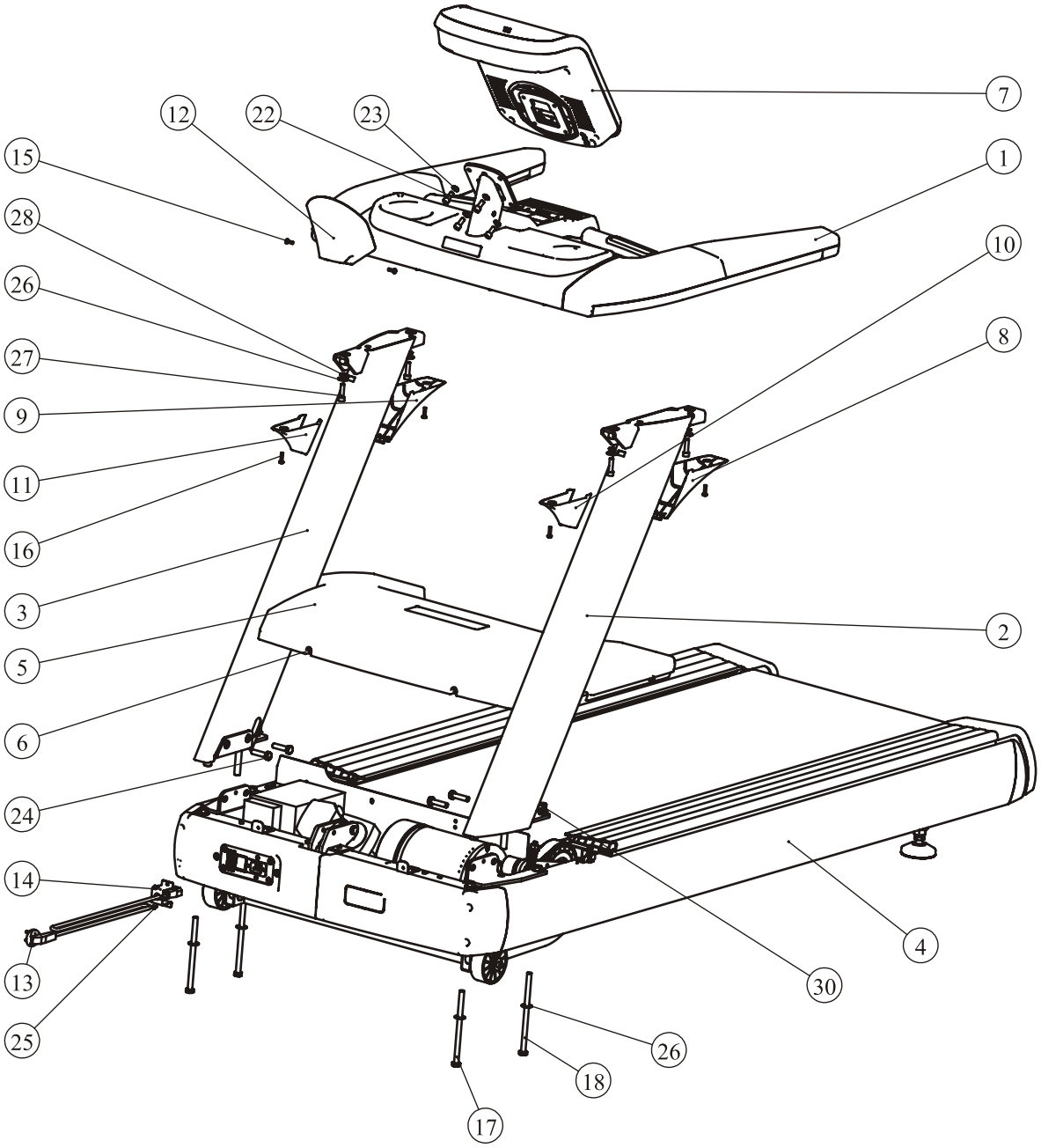

## Console Component

| Item No. | Grade No. | Part No. | Description | QTY |
|---|---|---|---|---|
| 1 | 7.1 | RE950DZB01 | uper cover,for console | 1 |
| 2 | 7.2 | CM116-930 | touch screen | 1 |
| 3 | 7.3 | B176-B | pcb,for USB | 1 |
| 4 | 7.4 | TX01 | antenna | 1 |
| 5 | 7.5 | GB845ST2.9*9.5DS | screw,ST4.2*9.5 | 6 |
| 6 | 7.6 | EVOE13800 | plate,for antenna | 1 |
| 7 | 7.7 | TFT116 | TFT display | 1 |
| 8 | 7.8 | EVOE13600 | press plate,for display | 8 |
| 9 | 7.9 | B207 | pcb，for communication | 1 |
| 10 | 7.10 | RE950DZB02 | 2.9 column | 17 |
| 11 | 7.11 | GB845ST2.9*13DS | screw,ST2.9*13 | 17 |
| 12 | 7.12 | EVOE13500 | pcb,frame | 1 |
| 13 | 7.13 | RE950DZB03 | 4.2 column | 3 |
| 14 | 7.14 | GB845ST4.2*16DHS | Screw ST4.2*16 | 11 |
| 15 | 7.15 | EVOE13700 | support post,for pcb | 8 |
| 16 | 7.16 | B172-930-WX | pcb | 1 |
| 17 | 7.17 | B177 | pcb,for touch screen | 1 |
| 18 | 7.18 | GB933DS12 | spring washer, Φ3 | 16 |
| 19 | 7.19 | GB818M3*5DS2 | screw,M3*5 | 16 |
| 20 | 7.20 | DQCH02-SBD | Magnet Ring | 2 |
| 21 | 7.21 | DQCH01-SBD | Magnet Ring | 3 |
| 22 | 7.22 | L500XHB-XHB-5A | cable,for USB | 1 |
| 23 | 7.23 | L450NJ-30 | cable,for display | 1 |
| 24 | 7.24 | L500XHB-TH-4A | cable,for communication | 1 |
| 25 | 7.25 | L500XHB-USB-4A | cable,for touch screen | 1 |
| 26 | 7.26 | L500XHB-XHB-10A | cable,for power | 1 |
| 27 | 7.27 | L500XHB-YP3.5-3 | cable,for headset | 1 |
| 28 | 7.28 | L200XHB-XHB-6 | cable,for video | 1 |
| 29 | 7.29 | L500HDMI-20-S | cable,for HDMI | 1 |
| 30 | 7.30 | L600RJ45-8-S | cable,for internet | 1 |
| 31 | 7.31 | L400XHB-SMY-6 | cable,for video | 1 |
| 32 | 7.32 | L190XHB-SMA-7 | Joint Wire 2 | 1 |
| 33 | 7.33 | L260VHR-SMA-2 | 12V power cable | 1 |
| 34 | 7.34 | L260XHB-SMA-4 | Joint Wire 1 | 1 |
| 35 | 7.35 | L300XHB-SMA-12 | Joint Wire 3 | 1 |
| 36 | 7.36 | RU900B0700 | console support frame | 1 |
| 37 | 7.37 | GB862.24DS12 | Washer D=4 | 1 |
| 38 | 7.38 | Z20-B | socket for audio | 1 |
| 39 | 7.39 | RU700DZB02 | lower cover,for console | 1 |

## Console Component

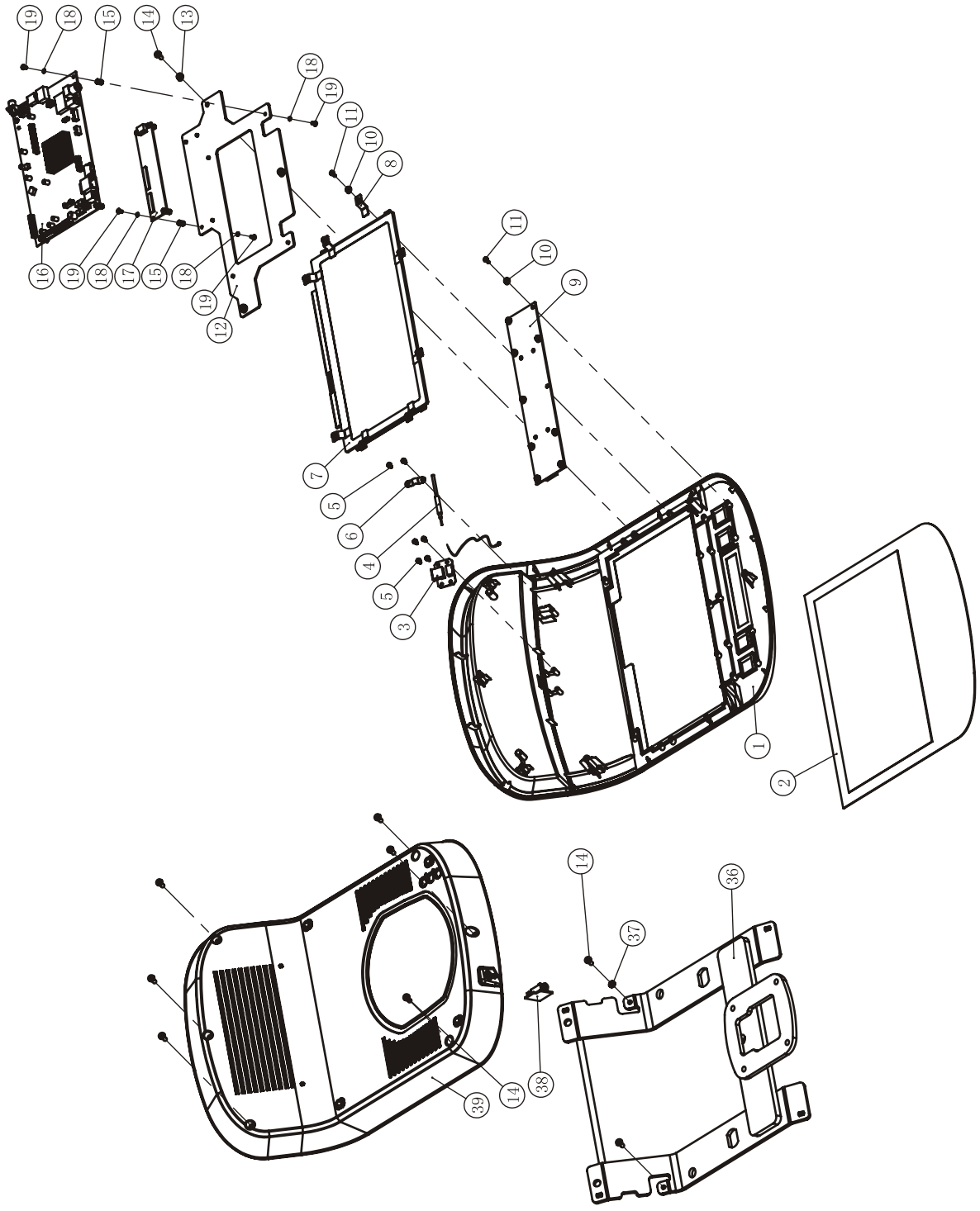

## Console Frame Assembly

| Item No. | Grade No. | Part No. | Description | QTY |
|---|---|---|---|---|
| 1 | 1.1 | RT7000100 | Console Frame | 1 |
| 2 | 1.2 | GB17880.3M8*16.5DS17 | Countersunk head hexagon riveted nuts M8 | 4 |
| 3 | 1.3 | GB17880.3M5*13DS17 | Countersunk head hexagon riveted nuts M5 | 15 |
| 4 | 1.4 | RT7000800 | Console Plate Frame | 1 |
| 5 | 1.5 | RT7001600V1 | Middle Z Fixing Plate | 1 |
| 6 | 1.6 | EVOT212ASSY | Handle Assembly | 1 |
| 7 | 1.7 | DQ8DS2A | Washer Φ9* Φ22*2 | 6 |
| 8 | 1.8 | GB70M8*15DS20 | Scoket Head Cap Screw M8*15 | 4 |
| 9 | 1.9 | GB70M8*20DS20 | Scoket Head Cap Screw M8*20 | 4 |
| 10 | 1.10 | GB70M8*55DS20 | Scoket Head Cap Screw M8*55 | 2 |
| 11 | 1.11 | NM8DS2 | Locknut M8 | 2 |
| 12 | 1.12 | RT7001500V1 | Console Linked Plate | 1 |
| 13 | 1.13 | GB818M5*15DHS20 | Phillip Screw M5*15 | 40 |
| 14 | 1.14 | RT7003700 | Console Left Up Cover | 1 |
| 15 | 1.15 | RT7003800 | Console Right Up Cover | 1 |
| 16 | 1.16 | AC32705800 | Clip Nut | 4 |
| 17 | 1.17 | GB5781M6*15DS2 | Hex Head Bolt M6*15 | 4 |
| 18 | 1.18 | RT7003500V1 | Left Handle | 1 |
| 19 | 1.19 | RT7003600V1 | Right Handle | 1 |
| 20 | 1.20 | GB818M5*35*35DS2 | Phillip Screw M5*35 | 4 |
| 21 | 1.21 | RT7003900V1 | Console Left Down Cover | 1 |
| 22 | 1.22 | RT7004000V1 | Console Right Down Cover | 1 |
| 23 | 1.23 | GB845ST4.2*13DHS | Phillip Screw ST4.2*13 | 6 |
| 24 | 1.24 | RT7004800 | Left Signing Light Fixing Plate | 1 |
| 25 | 1.25 | RT7004900 | Right Signing Light Fixing Plate | 1 |
| 26 | 1.26 | RT7005200 | Console Signing Light Cover | 2 |
| 27 | 1.27 | RT90013ASSY | Fan Assembly | 1 |
| 28 | 1.28 | RT7006800 | Switch Fixing Plate | 1 |
| 29 | 1.29 | B108 | Switch Pcb | 1 |
| 30 | 1.30 | GB845ST2.9*6.5DS | Phillip Screw ST2.9*6.5 | 8 |
| 31 | 1.31 | L900JD-SM-VHR-10 | Console Wire Up | 1 |
| 32 | 1.32 | DQCH02-SBD | Ferrite | 2 |
| 33 | 1.33 | DQSWXT01-S | Pulse Plate | 1 |
| 34 | 1.34 | L350XHB_XHB-3 | Linked Wire Fron Pulse Pcb to PCB | 1 |
| 35 | 1.35 | AC32709906 | The Receiver Cover | 1 |
| 36 | 1.36 | DQXTJS02 | Receptor | 1 |
| 37 | 1.37 | SMJ10*1*1000 | Tape | 1 |

## Console Frame Assembly

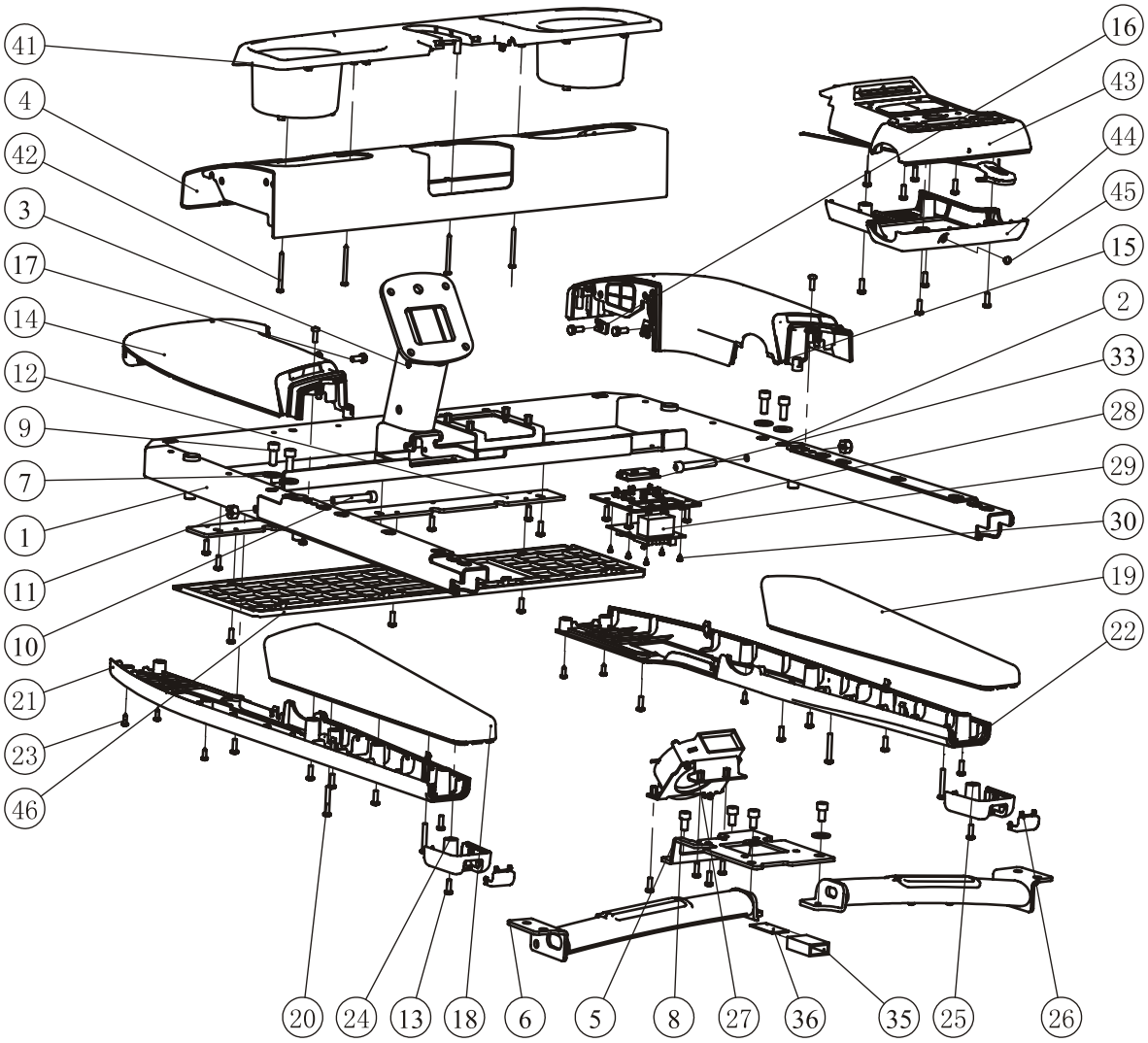


| Item No. | Grade No. | Part No. | Description | QTY |
|---|---|---|---|---|
| 38 | 1.38 | DQCH01-SBD | Ferrite | 1 |
| 39 | 1.39 | GB862.24DS12 | Serrated lock washers ϕ4 | 1 |
| 40 | 1.40 | GB6560M4*8DSG | Phillip Screw M4*8 | 1 |
| 41 | 1.41 | RT7004700 | Cup Holder | 1 |
| 42 | 1.42 | GB845ST4.2*50DHS | Phillip Screw ST4.2*50 | 4 |
| 43 | 1.43 | RT50008ASSY | A-ZONE Up Cover Assembly | 1 |
| 44 | 1.44 | RT7005500 | A-ZONE Down Cover | 1 |
| 45 | 1.45 | RT7005300 | Earphone Hole Plug | 1 |
| 46 | 1.46 | RT7006700 | Console Bottom Plate | 1 |
| 47 | 1.47 | ECT7JG01 | Warning lable | 1 |

## Deck Frame and Inverter Frame Assembly

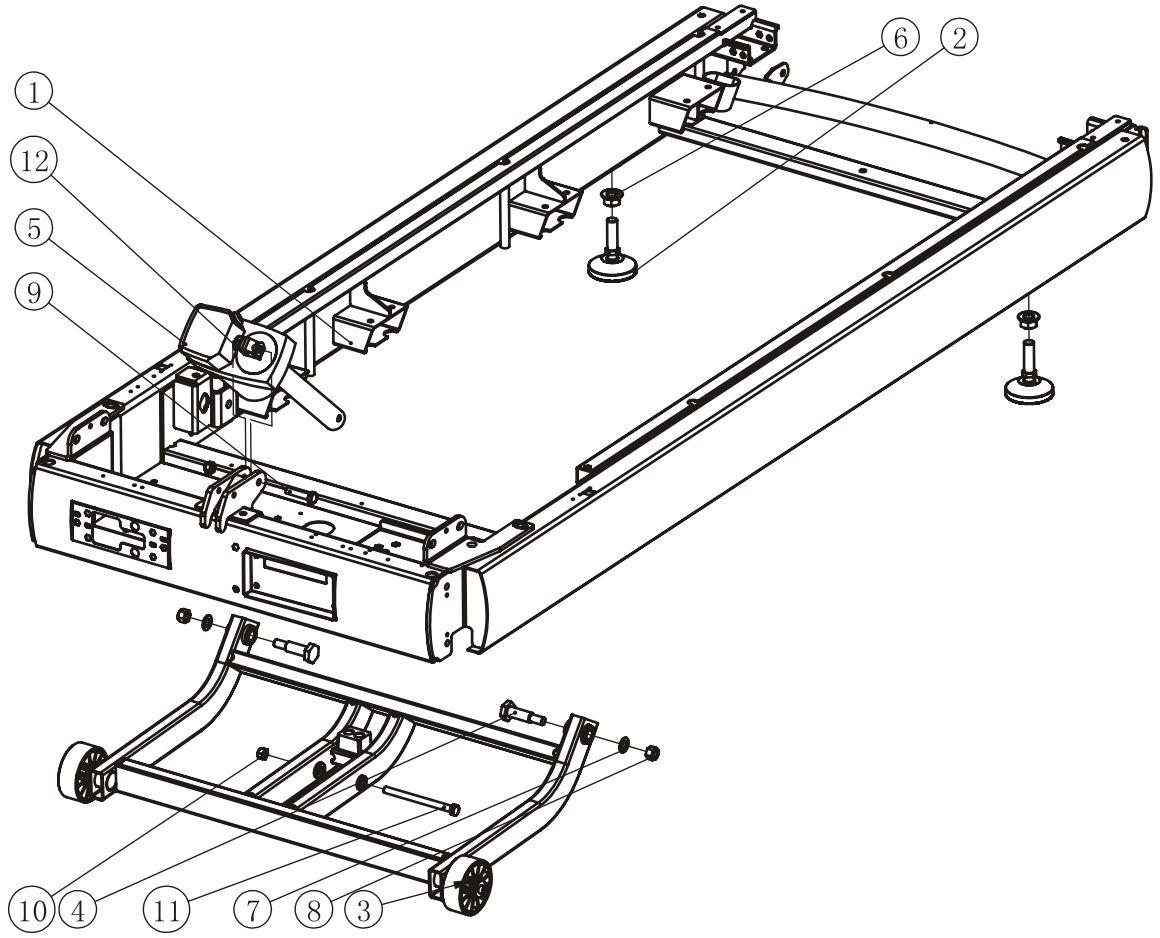


| Item No. | Grade No. | Part No. | Description | QTY |
|---|---|---|---|---|
| 1 | 4.1.1 | EVOT10400 | Deck Frame | 1 |
| 2 | 4.1.2 | STDP3400 | Adjust Support | 2 |
| 3 | 4.1.3 | RT75005ASSY | Inverter Frame ASSY | 1 |
| 4 | 4.1.4 | RT7001900 | Hex Head Bolt M10*130 | 2 |
| 5 | 4.1.5 | R37-22Y-RDS | Actuator | 1 |
| 6 | 4.1.6 | GB6177M16DS2 | Hex flange nut M16 | 2 |
| 7 | 4.1.7 | DQ12DS2A | Washer $\phi$13* $\phi$24*1.5 | 2 |
| 8 | 4.1.8 | NM12DS2 | Locknut M12 | 2 |
| 9 | 4.1.9 | GB5780M10*45DS20 | Hex Head Bolt M10*45 | 1 |
| 10 | 4.1.10 | NM10DS2 | Locknut M10 | 2 |
| 11 | 4.1.11 | GB5780M10*130DS20 | Hex Head Bolt M10*130 | 1 |
| 12 | 4.1.12 | FLPSR-5500 | Teflon washer | 2 |

## Mainframe ASSY

| Item No. | Grade No. | Part No. | Description | QTY |
|---|---|---|---|---|
| 1 | 4.1 | EVOT103-22ESASSY | Deck Frame and Inverter Frame Assembly | 1 |
| 2 | 4.2 | AC32700636 | Washer $\phi$30*$\phi$9*3 | 6 |
| 3 | 4.3 | PT3002800P294U | Bumper A | 6 |
| 4 | 4.4 | PT3002900P294U | Bumper B | 2 |
| 5 | 4.5 | AC3170B5200 | Bumper | 4 |
| 6 | 4.6 | RT7501000 | Dust Proof Plate | 1 |
| 7 | 4.7 | RT3002400V1 | Deck | 1 |
| 8 | 4.8 | EVOT21700 | Running Belt | 1 |
| 9 | 4.9 | DXD270J12A | V-Belt | 1 |
| 10 | 4.10 | PT300H22ASSY | Front Roller and Jockey Pulley ASSY | 1 |
| 11 | 4.11 | RT7003300 | Rear Roller | 1 |
| 12 | 4.12 | RT7508500 | Insulation Bumper | 1 |
| 13 | 4.13 | RT7508000 | Insulation Base A | 4 |
| 14 | 4.14 | L250AMP175022-1-N-14 | Connect Wire | 1 |
| 15 | 4.15 | D40-42B-ZH | Motor | 1 |
| 16 | 4.16 | PT300H1400 | Pothook | 1 |
| 17 | 4.17 | STDP4700 | Spring for Jockey Pulley | 1 |
| 18 | 4.18 | AC32705800 | Clip Nut M6 | 6 |
| 19 | 4.19 | DQBPQ2.2-S21 | Inverter | 1 |
| 20 | 4.20 | Q03 | Filter | 1 |
| 21 | 4.21 | Q02-S3 | Inductance | 1 |
| 22 | 4.22 | RT93013ASSY | Switch Cover ASSY | 1 |
| 23 | 4.23 | RT90014ASSY | Left Side Rail Assembly | 1 |
| 24 | 4.24 | RT90015ASSY | Right Side Rail Assembly | 1 |
| 25 | 4.25 | RT7002700 | Left Rear Decorative Cover | 1 |
| 26 | 4.26 | RT7002900 | Middle Protective Cover | 1 |
| 27 | 4.27 | RT7002500 | Left End Cap | 1 |
| 28 | 4.28 | RT7002800 | Right Rear Decorative Cover | 1 |
| 29 | 4.29 | RT7002600 | Right End Cap | 1 |
| 30 | 4.30 | RT7001100 | Front Motor Cover Fixing L Plate | 2 |
| 31 | 4.31 | RT7001200 | Motor Cover Fixing L Plate | 2 |
| 32 | 4.32 | RT7001400 | Front Cover Fixing Plate | 2 |
| 33 | 4.33 | RT7002200 | Right Front Decorative Cover | 1 |
| 34 | 4.34 | RT7002100V1 | Left Front Decorative Cover | 1 |
| 35 | 4.35 | RT7002000 | Motor Cover | 1 |
| 36 | 4.36 | GB17880.3M5*13DS17 | Countersunk head hexagon riveted nuts M5 | 12 |

## Mainframe ASSY

| Item No. | Grade No. | Part No. | Description | QTY |
|---|---|---|---|---|
| 37 | 4.37 | STDP6800 | Locknut M8 | 12 |
| 38 | 4.38 | GB17880.5M6*16.5DS17 | Flat head hexagon riveted nuts M6 | 18 |
| 39 | 4.39 | GB17880.3M6*15DS17 | Countersunk head hexagon riveted nuts M6 | 2 |
| 40 | 4.40 | NM8DS2 | Locknut M8 | 1 |
| 41 | 4.41 | GB845ST4.2*13DS | Phillip Screw ST4.2*13 | 19 |
| 42 | 4.42 | CNLM8*35DHS20NL | Hexagon socket countersunk head cap head screw M8*35 | 8 |
| 43 | 4.43 | PNLM8*60DS20 | Hexalobular socket pan head tapping screw M8*60 | 1 |
| 44 | 4.44 | DQ8DS2A | Washer $\phi$9* $\phi$22*2 | 7 |
| 45 | 4.45 | GB70M8*80*80DHS6 | Socket Head Cap Screw M8*80 | 2 |
| 46 | 4.46 | GB5780M8*30DS20NL | Hex Head Bolt M8*30 | 4 |
| 47 | 4.47 | GB818M5*20DS2 | Phillip Screw M5*20 | 4 |
| 48 | 4.48 | GB818M5*15DS2 | Phillip Screw M5*15 | 8 |
| 49 | 4.49 | DQCH01-SBD | Ferrite | 1 |
| 50 | 4.50 | GB70M6*20DHS20 | Socket Head Cap Screw M6*20 | 24 |
| 51 | 4.51 | GB5780M8*150DS2 | Hex Head Bolt M8*150 | 6 |
| 52 | 4.52 | GB70M6*30DS4 | Phillip Screw M6*30 | 6 |
| 53 | 4.53 | GB70M6*60DS2 | Socket Head Cap Screw M6*60 | 2 |
| 54 | 4.54 | GB5780M10*165*40DS20 | Hex Head Bolt M10*165 | 2 |
| 55 | 4.55 | DQ10DS2A | Washer $\phi$11* $\phi$23*2 | 6 |
| 56 | 4.56 | GB5780M10*180DHS2 | Hex Head Bolt M10*180 | 2 |
| 57 | 4.57 | GB6560M4*8DSG | Phillip Screw M4*8 | 3 |
| 58 | 4.58 | GB862.24DS12 | Serrated lock washers $\phi$4 | 3 |
| 59 | 4.59 | DQXK8.4 | U-shape Wires Clip | 2 |
| 60 | 4.60 | L250AMP175022-1-L-14 | Connect wire | 1 |
| 61 | 4.61 | L1600JD-SM-XHB-10 | Console Wire Down | 1 |
| 62 | 4.62 | LD2000 | Protective Sleeve | 1 |
| 63 | 4.63 | SD3*150 | Band Cable | 6 |
| 64 | 4.64 | GB41M10DS2 | Nut M10 | 4 |
| 65 | 4.65 | DQCH02-SBD | Ferrite | 1 |
| 66 | 4.66 | GB17880.5M8*16.5DCS17 | Flat head hexagon riveted nuts M8 | 4 |
| 67 | 4.67 | RT7001800 | U-shape bracket | 1 |
| 68 | 4.68 | SDZ21 | Band Cable holder | 3 |
| 69 | 4.69 | EVOT161ASSY | Mul-PCB Assembly | 1 |
| 70 | 4.70 | L2700HDMI-20-S | cable,for HDMI 2 | 1 |
| 71 | 4.71 | L2700RJ45-8-S | internet cable 2 | 1 |
| 72 | 4.72 | L2700XHB-SMA-6 | cable,for video 2 | 1 |
| 73 | 4.73 | GB818M5*40DS2 | Phillip Screw M5*40 | 4 |

## Mainframe ASSY

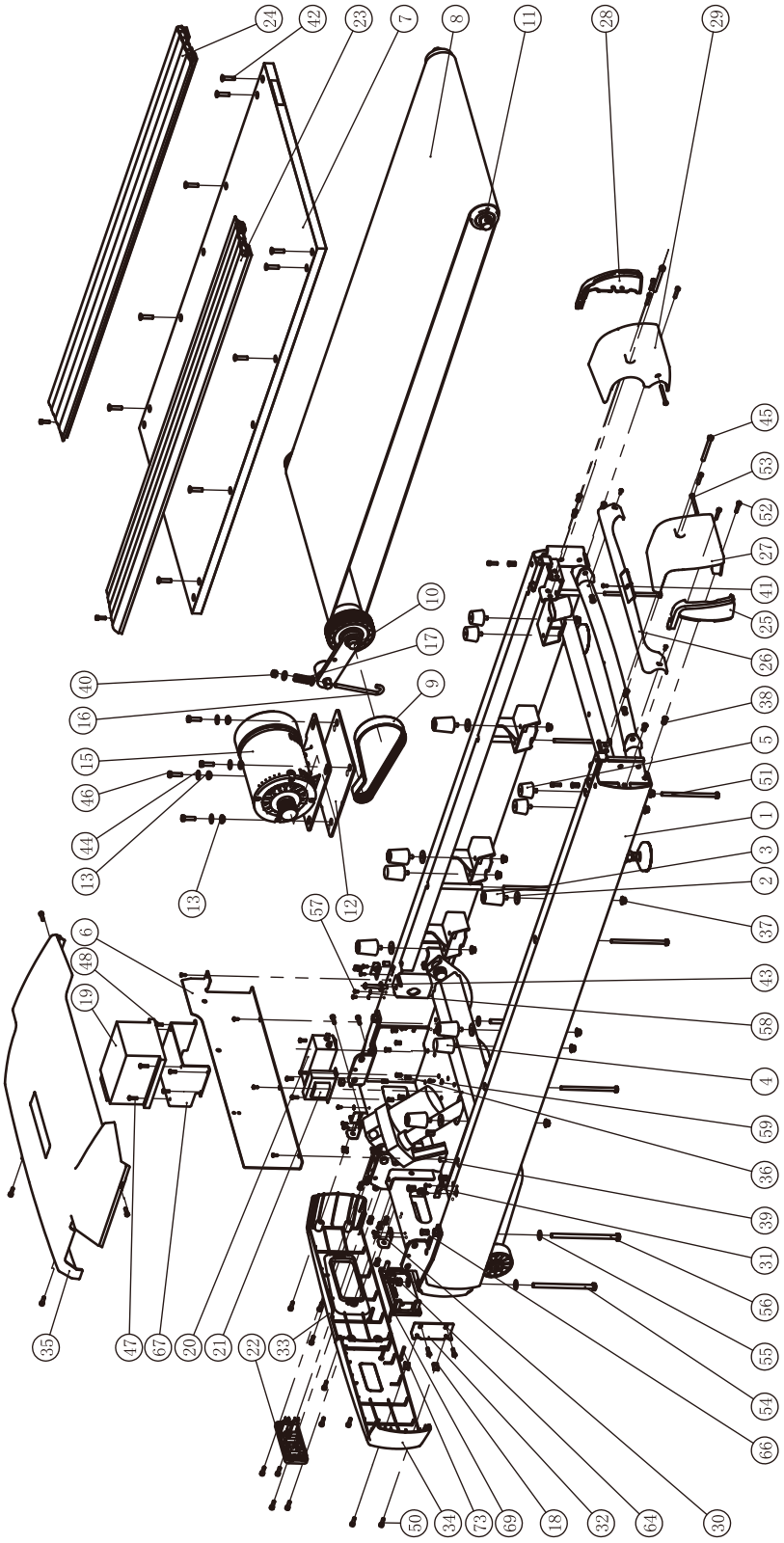

## Inverter Frame ASSY

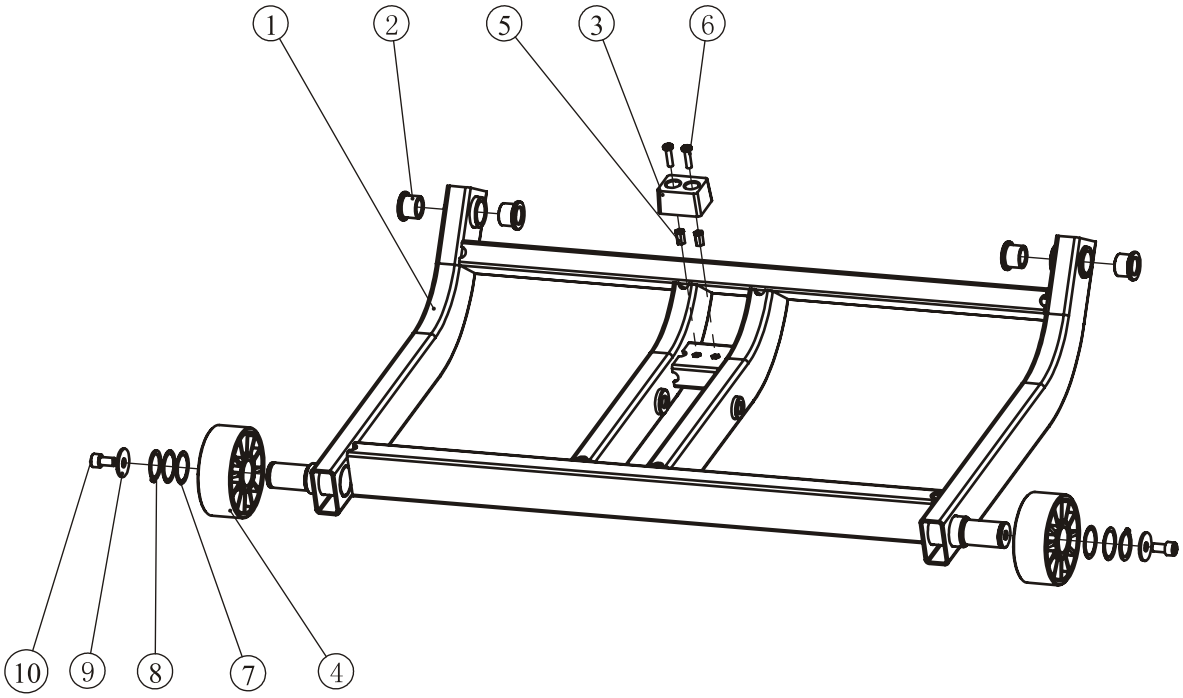


| Item No. | Grade No. | Part No. | Description | QTY |
|---|---|---|---|---|
| 1 | 4.1.3.1 | RT7500500 | Inverter Frame | 1 |
| 2 | 4.1.3.2 | L1-6800 | Neck bush | 4 |
| 3 | 4.1.3.3 | IN-B75052000 | Ground bumper | 1 |
| 4 | 4.1.3.4 | DC29002200 | Wheel | 2 |
| 5 | 4.1.3.5 | GB17880.3M5*13DS17 | Countersunk head hexagon riveted nuts M5 | 2 |
| 6 | 4.1.3.6 | GB818M5*20DS2 | Phillip Screw M5*20 | 2 |
| 7 | 4.1.3.7 | DQ25DHS2B | Adjust Washer $\phi$ 25 | 4 |
| 8 | 4.1.3.8 | GB894.125FH12 | Circlip for shaft | 2 |
| 9 | 4.1.3.9 | DQ8DHS2B | Washer Washer $\phi$ 9* $\phi$ 28*2 | 2 |
| 10 | 4.1.3.10 | GB70M8*15DHS4 | Socket Head Cap Screw M8*15 | 2 |

## A-ZONE Up Cover Assembly

| Item No. | Grade No. | Part No. | Description | QTY |
|---|---|---|---|---|
| 1 | 1.43.1 | RT7005400 | A-ZONE Up Cover | 1 |
| 2 | 1.43.2 | RT5006300 | A-ZONE Insert | 1 |
| 3 | 1.43.3 | RT5005700 | Fan Key | 7 |
| 4 | 1.43.4 | RT7005800 | COOL DOWN\PAUSE Key | 1 |
| 5 | 1.43.5 | RT5006600V1 | Start Key | 1 |
| 6 | 1.43.6 | F32 | Key PCB | 1 |
| 7 | 1.43.7 | GB845ST2.9*6.5DS | Phillip Screw ST2.9*6.5 | 9 |
| 8 | 1.43.8 | GB845ST2.9*9.5DS | Phillip Screw ST2.9*9.5 | 4 |
| 9 | 1.43.9 | RT7006100 | Air Grid | 1 |
| 10 | 1.43.10 | RT7006200 | Air Up Cover | 1 |
| 11 | 1.43.11 | RT7005600 | Emergency Switch Key | 1 |
| 12 | 1.43.12 | PT3002400 | Reposition Rack | 1 |
| 13 | 1.43.13 | PT3002500 | Restrict Spring | 2 |
| 14 | 1.43.14 | RT7005900 | Limit Key Fixing Plate | 1 |
| 15 | 1.43.15 | F10 | Emergency Switch | 2 |
| 16 | 1.43.16 | RT7006000 | Emergency Switch Baffle | 1 |
| 17 | 1.43.17 | GB8964FH12 | Split damping ring $\Phi$9 | 1 |
| 18 | 1.43.18 | PT3003600 | Nylon Shaft | 1 |
| 19 | 1.43.19 | GB845ST4.2*13DHS | Phillip Screw ST4.2*13 | 3 |
| 20 | 1.43.20 | L600ST0/XHP-2 | Emergency Switch Wire | 2 |
| 21 | 1.43.21 | L800XHP-XHP-3 | Spd And Incl Connect wire | 1 |
| 22 | 1.43.22 | RT500MM02 | A ZONE Up Overlay | 1 |
| 23 | 1.43.23 | RT500MM03 | A ZONE Down Overlay | 1 |
| 24 | 1.43.24 | STDP4012 | Safe Key Clamp | 1 |

## A-ZONE Up Cover Assembly

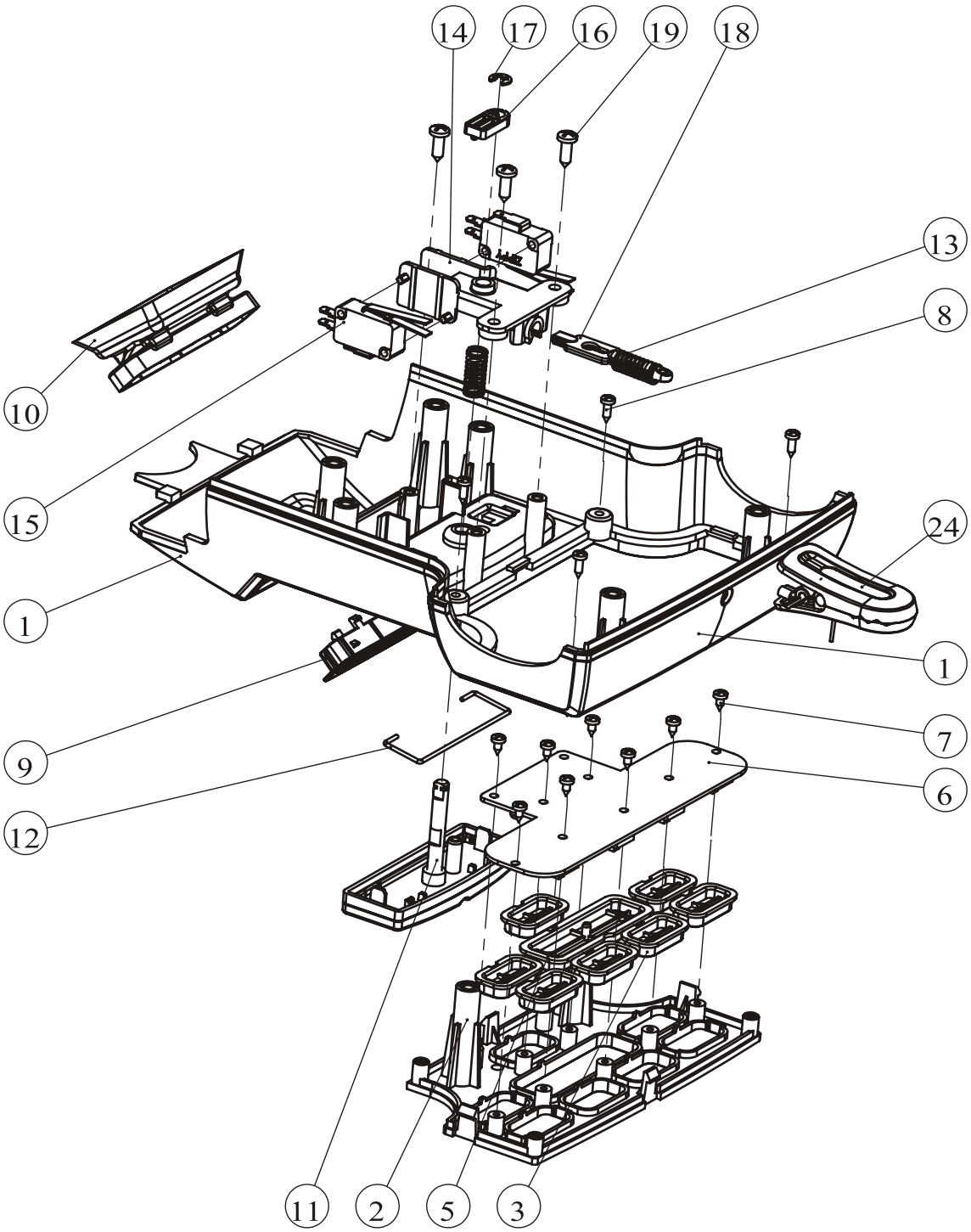

## Handle Assembly

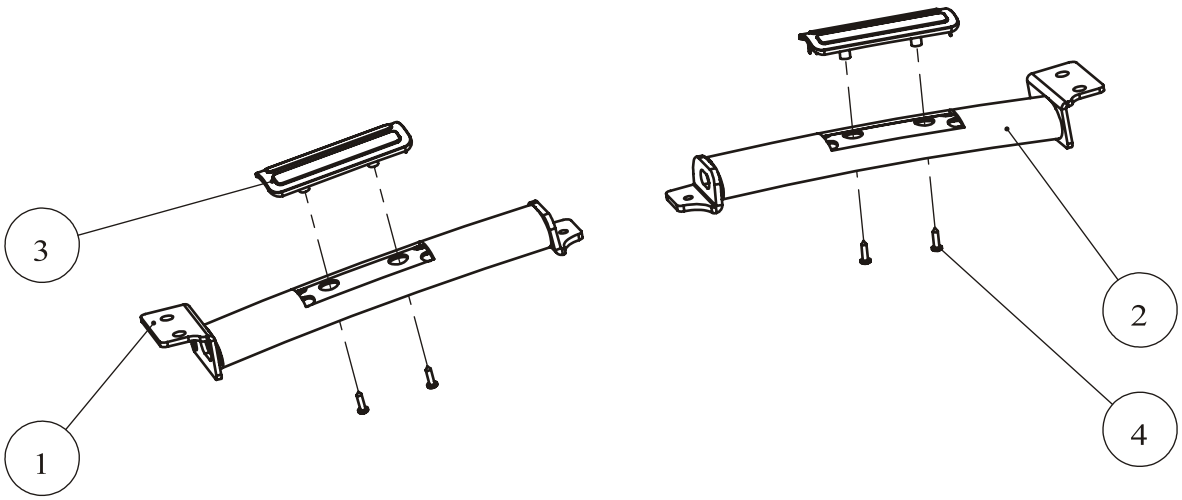


| Item No. | Grade No. | Part No. | Description | QTY |
|---|---|---|---|---|
| 1 | 1.6.1 | RT5000600 | Left Handle Frame | 1 |
| 2 | 1.6.2 | RT5000700 | Right Handle Frame | 1 |
| 3 | 1.6.3 | RT5006900 | Pulse Fixing Plate | 2 |
| 4 | 1.6.4 | GB845ST4.2*16DS | Phillip Screw ST4.2*16 | 4 |
| 5 | 1.6.5 | L750ST0_XHB-4 | Pulse Connect Wire | 1 |
| 6 | 1.6.6 | DQCH01-SBD | Ferrite | 2 |

## Switch Cover ASSY

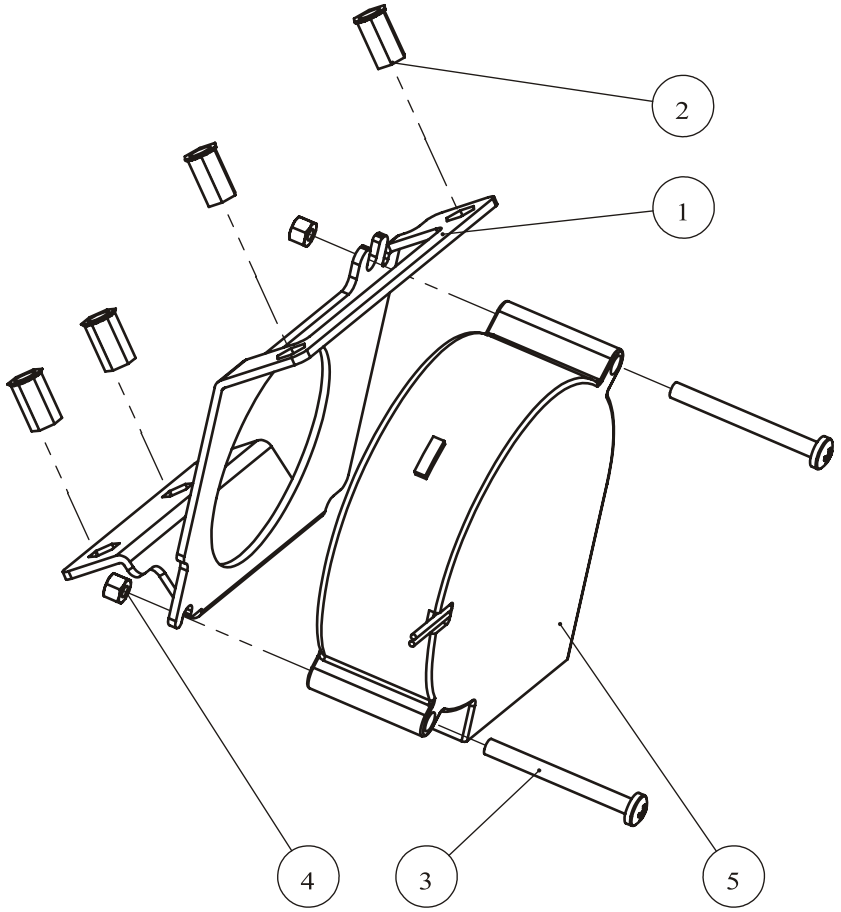


| Item No. | Grade No. | Part No. | Description | QTY |
|---|---|---|---|---|
| 1 | 4.22.1 | RT7003000 | Switch Cover | 1 |
| 2 | 4.22.2 | F23 | Power Switch | 1 |
| 3 | 4.22.3 | Z13 | Power Outlet | 1 |
| 4 | 4.22.4 | 08-0004 | Fuse | 2 |
| 5 | 4.22.5 | GB41M3DS2 | Nut M3 | 2 |
| 6 | 4.22.6 | GB818M3*10DS2 | Phillip Screw M3*10 | 2 |
| 7 | 4.22.7 | 740-6016 | Earth Wire | 1 |
| 8 | 4.22.8 | L100AMP175022-1-L-14 | Connect Wire | 2 |
| 9 | 4.22.9 | L100AMP175022-1-N-14 | Connect Wire | 2 |
| 10 | 4.22.10 | DQCH02-SBD | Ferrite | 1 |
| 11 | 4.22.11 | L250AMP175022-1-L-14 | Connect Wire | 1 |
| 12 | 4.22.12 | L250AMP175022-1-N-14 | Connect Wire | 1 |

## Left Side Rail Assembly

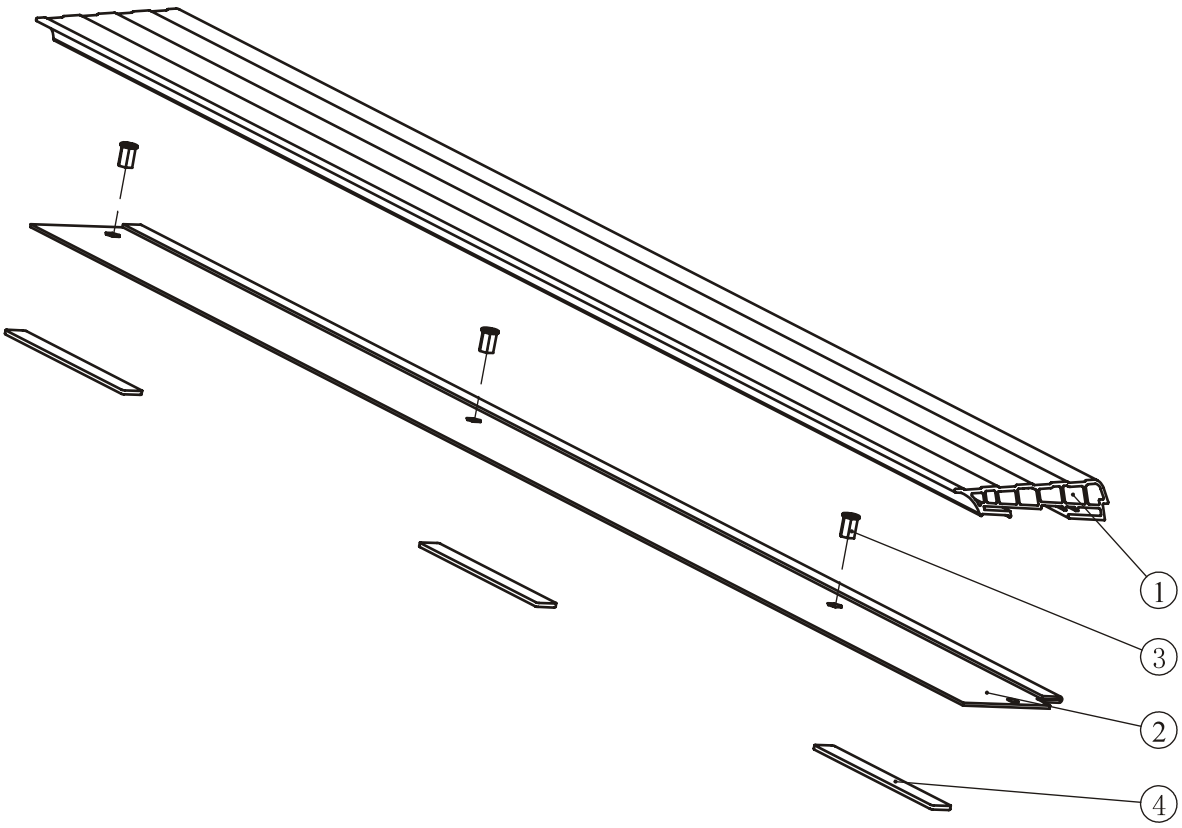


| Item No. | Grade No. | Part No. | Description | QTY |
|---|---|---|---|---|
| 1 | 4.23.1 | RT7007200 | Left Side Rail | 1 |
| 2 | 4.23.2 | RT7007400 | Frame for Left Side Rail | 1 |
| 3 | 4.23.3 | RT7508700 | Single Sided Adhesive | 3 |
| 4 | 4.23.4 | GB17880.5M8*16.5DCS17 | Flat head hexagon riveted nuts M8 | 3 |

## Right Side Rail Assembly

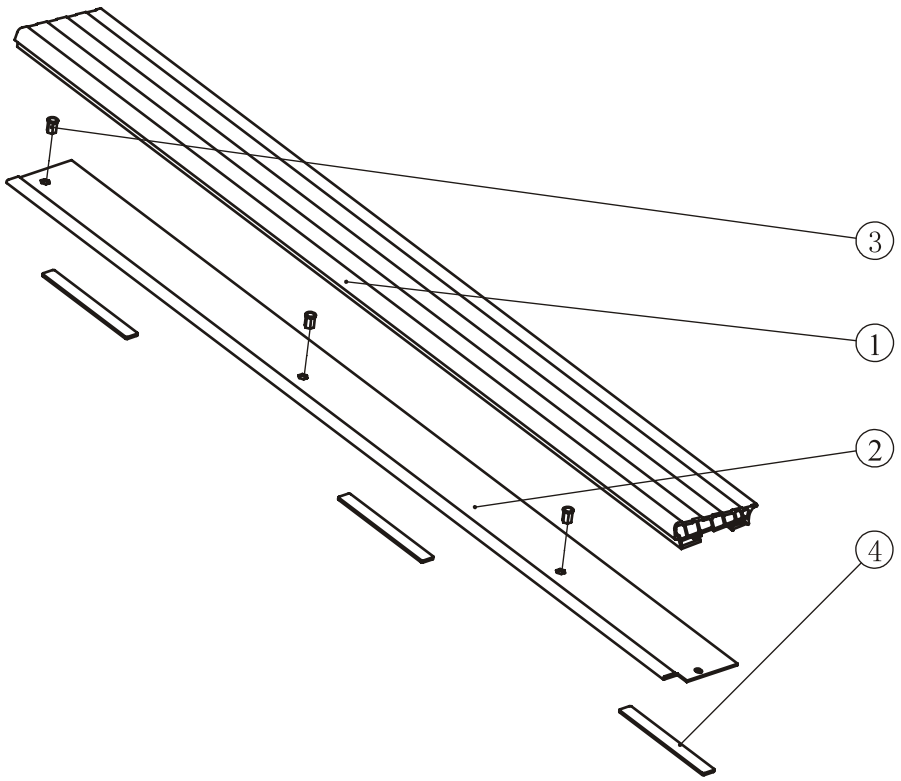


| Item No. | Grade No. | Part No. | Description | QTY |
|---|---|---|---|---|
| 1 | 4.24.1 | RT7007300 | Right Side Rail | 1 |
| 2 | 4.24.2 | RT7007500 | Frame for Right Side Rail | 1 |
| 3 | 4.24.3 | RT7508700 | Single Sided Adhesive | 3 |
| 4 | 4.24.4 | GB17880.5M8*16.5DCS17 | Flat head hexagon riveted nuts M8 | 3 |

## Fan Assembly

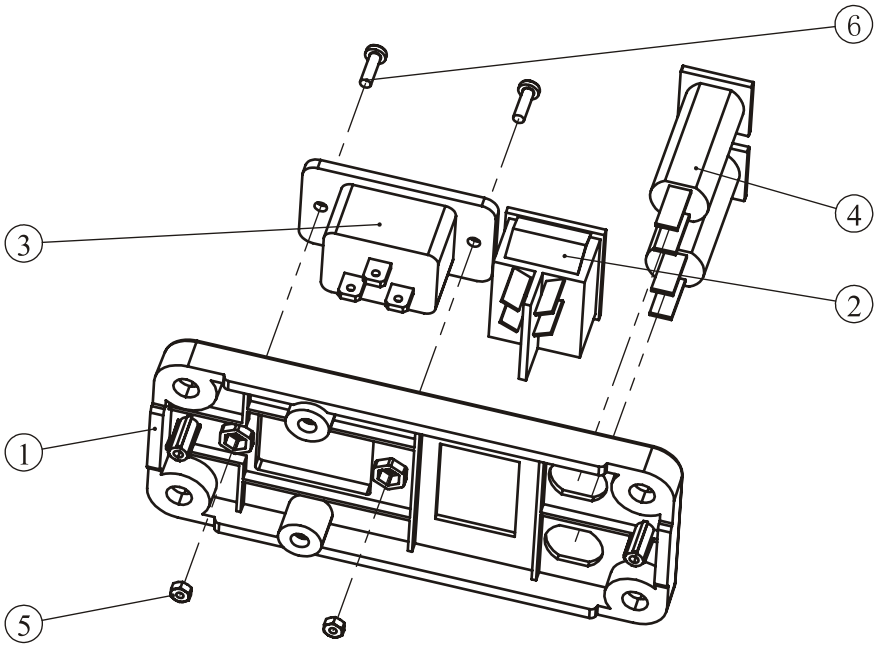


| Item No. | Grade No. | Part No. | Description | QTY |
|---|---|---|---|---|
| 1 | 1.27.1 | RT7004100 | Fan Fixing Plate | 1 |
| 2 | 1.27.2 | GB17880.3M5*13DS17 | Countersunk head hexagon riveted nuts M5 | 4 |
| 3 | 1.27.3 | GB818M4*40DS2 | Phillip Screw M4*40 | 2 |
| 4 | 1.27.4 | GB41M4DS2 | Hex nut M4 | 2 |
| 5 | 1.27.5 | P07 | Fan | 1 |

| | |
|---|---|
| Rated Voltage: | 220-240V~ 50/60Hz |
| Rated Power: | 2300W |
| Speed Range: | 1-20km/h |
| Incline Range: | 0-15% |
| Display: | SPEED, INCLINE, TIME, HEART RATE, CALORIES, CAL/HOUR, DISTANCE, TFT |

# 1. quick start

## 1.1 Main page after power up.

The top bar is used to show the information related with your training process. The bottom bar is the controlling bar of this equipment.

The 1st button on the bottom bar is 'Return'. The second button is 'Main page' and the 3rd button is 'Shrink', it can hid the top and bottom bar to the right side of the screen in order to let you see the whole screen.

1.2 Press the 'quick start' button in figure 1.1, you can start this equipment quickly. Now you are in manual mode.

# Console Panel Functions

Press + or – button below the red icon INCLINE can adjust incline.
Press + or – button below the red icon SPEED can adjust speed.
Also you can press quick button 3,6,9,12 to adjust incline or speed quickly.
When you press the stop button on the bottom bar, you will get the summary page as follow.

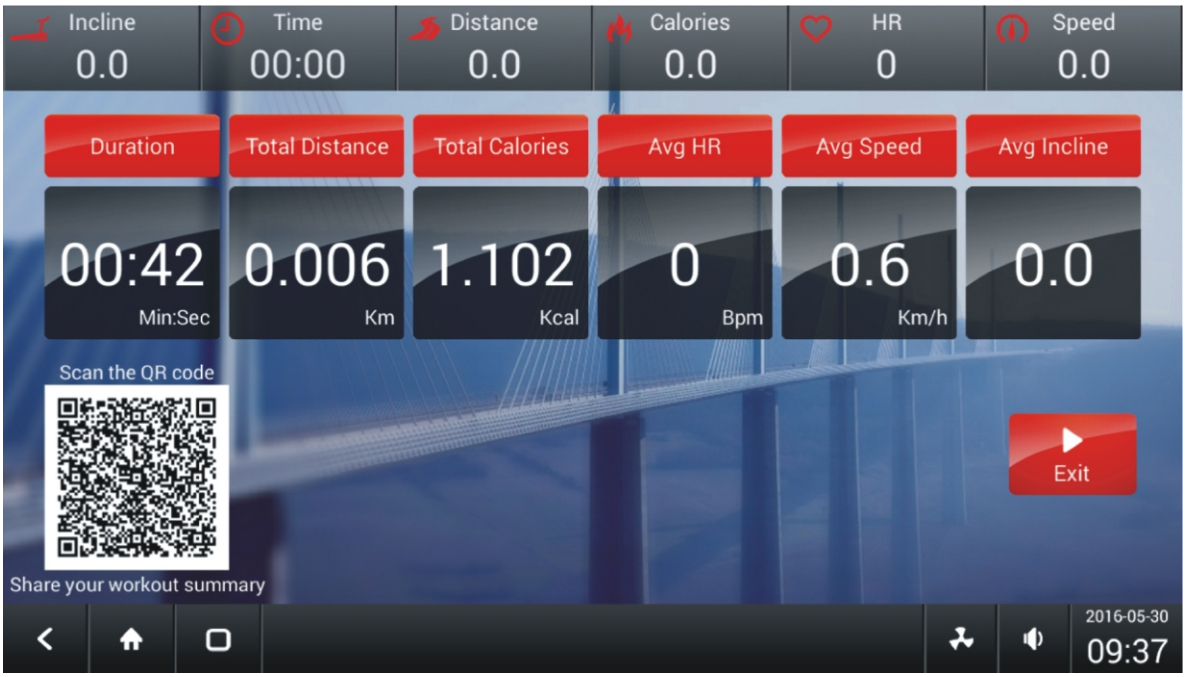

Scan the QR code, you can share you workout to your friends.
Press the red 'Exit' button will return to main page, and you can try other training mode then.

## 2. Program mode

2.1 Press the program button in the middle of the main page---Figure 1.1
We will enter program mode. Here is the program mode interface.

All together, we have 8 program modes---CARDIO,RANDOM, FATBURN,HILLS,INTERVAL,HR,5KM and FIREMANTEST.

**2.2.1 CARDIO mode.**
Press CARDIO button in the middle of the screen as above figure will enter CARDIO mode, the interface is as follow figure.

Press the number button bellow the red 'Weight' icon will lead you to weight adjust page as figure 2.2.1.1

Press the number button bellow the red 'Time' icon will lead you to the time adjust page as figure 2.2.1.2

Press the red 'Start' button to start CARDIO mode training as figure 2.2.1.3

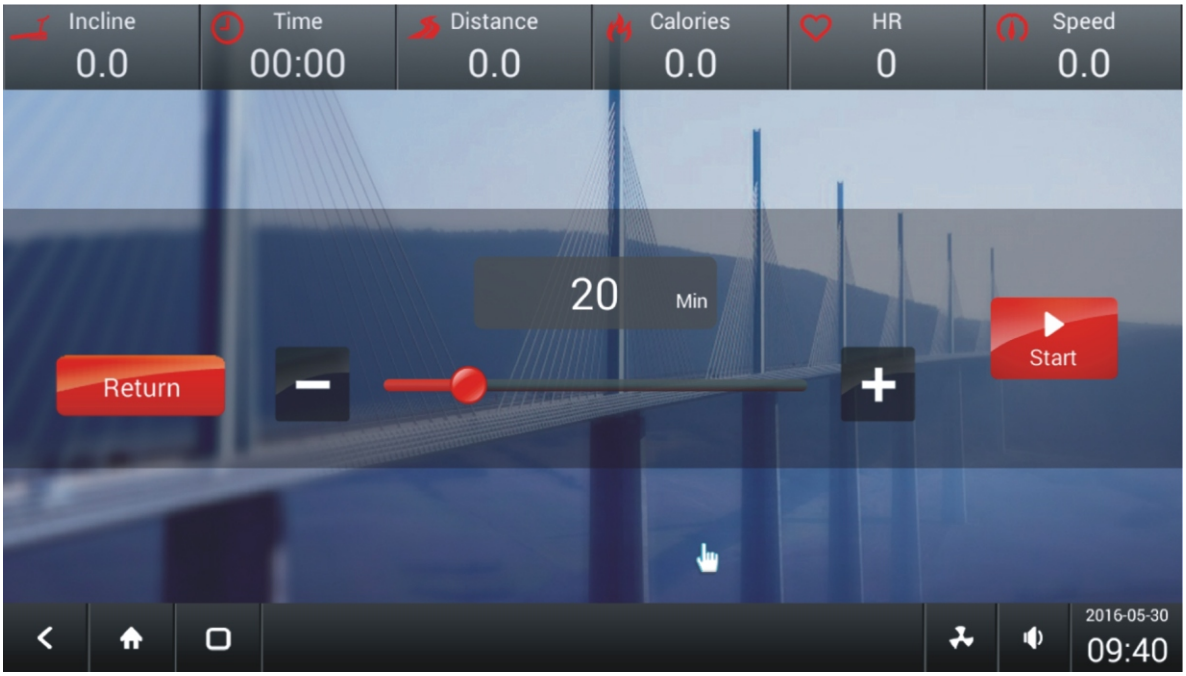

**2.2.2 RANDOM mode.**

Press RANDOM button in the middle of the screen as above figure 2.1 will enter RANDOM mode, You can adjust the related parameter in the same way as CARDIO mode.

Press the 'Start' button will start the RANDOM mode training as follow.

**2.2.3 FATBURN mode.**

Press FATBURN button in the middle of the screen as above figure 2.1 will enter FATBURN mode, You can adjust the related parameter in the same way as CARDIO mode.

Press the red 'Start' button to start FATBURN mode training as figure.

**2.2.4 HILLS mode.**

Press 'HILLS' button in the middle of the screen as above figure 2.1 will enter HILLS mode. You can adjust the related parameter in the same way as CARDIO mode.

Press the 'Start' button will start the HILLS mode training as figure.

**2.2.5 INTERVAL mode.**

Press 'INTERVAL' button in the middle of the screen as above figure 2.1 will enter INTERVAL mode, You can adjust the related parameter in the same way as CARDIO mode.

Press the red 'Start' button to start INTERVAL mode training as figure.

**2.2.6 5KM mode.**

Press '5KM' button in the middle of the screen as above figure 2.1 will enter 5KM mode, You can adjust the weight parameter in the same way as CARDIO mode.

Press the red 'Start' button to start 5KM mode training as figure.

**2.2.7 HR mode.**

Press 'HR' button in the middle of the screen as above figure 2.1 will enter HR mode, You can adjust the related parameter in the same way as CARDIO mode.

Press the red 'Start' button to start HR mode training as figure.

**2.2.8 FIREMAN TEST mode.**

Press 'FIREMANTEST' button in the middle of the screen as above figure 2.1 will enter FIREMANTEST mode. You can adjust the weight parameter in the same way as CARDIO mode.

Press the red 'Start' button to start FIREMAN TEST mode training.

## 3. Target mode.

Press the target button in the middle of the main page---Figure 1.1,
We will enter target mode. Here is the target mode interface.

All together, we have 3 target modes---DISTANCE mode, TIME mode and CALORIES mode.

3.1 Press the 'DISTANCE' button in figure 3.1 will enter DISTANCE mode as follow, You can adjust the related parameter in the same way as CARDIO mode.

Press the red 'Start' button to start DISTANCE mode training as figure.

Press the top bar will show you the target and remains distance as follow.

3.2 Press the 'TIME' button in figure 3.1 will enter TIME mode as follow, You can adjust the related parameter in the same way as CARDIO mode.

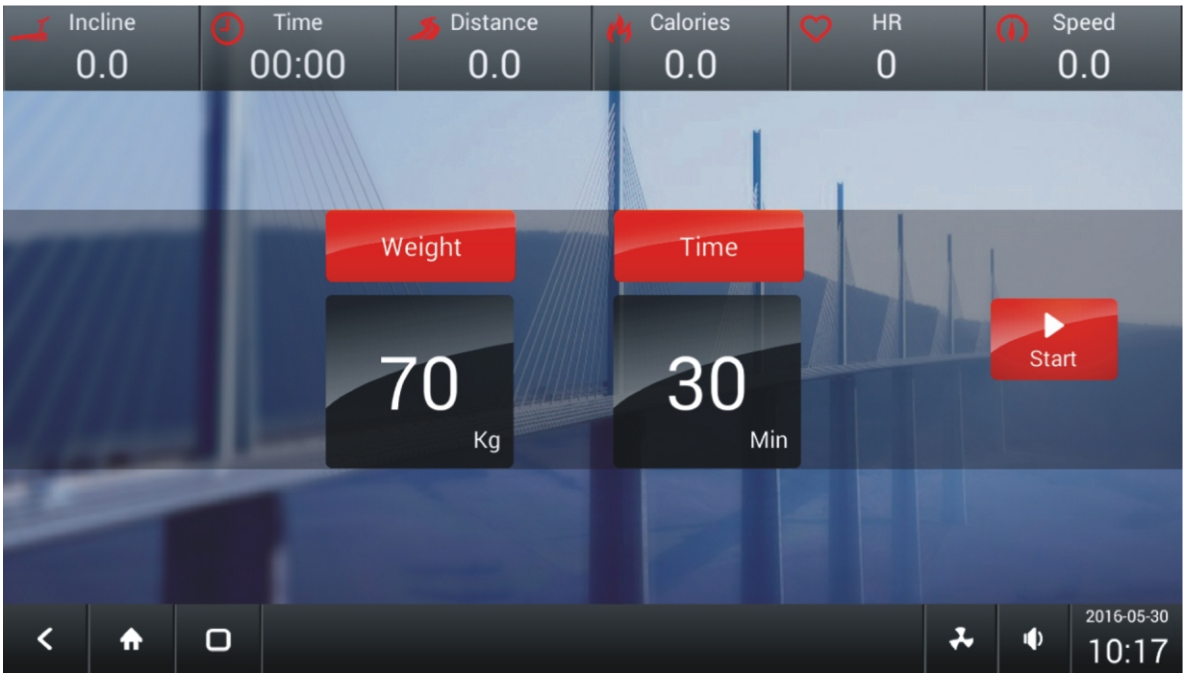


Press the red 'Start' button to start TIME mode training as figure.

3.3 Press the 'CALORIES' button in figure 3.1 will enter CALORIES mode as follow, You can adjust the related parameter in the same way as CARDIO mode.

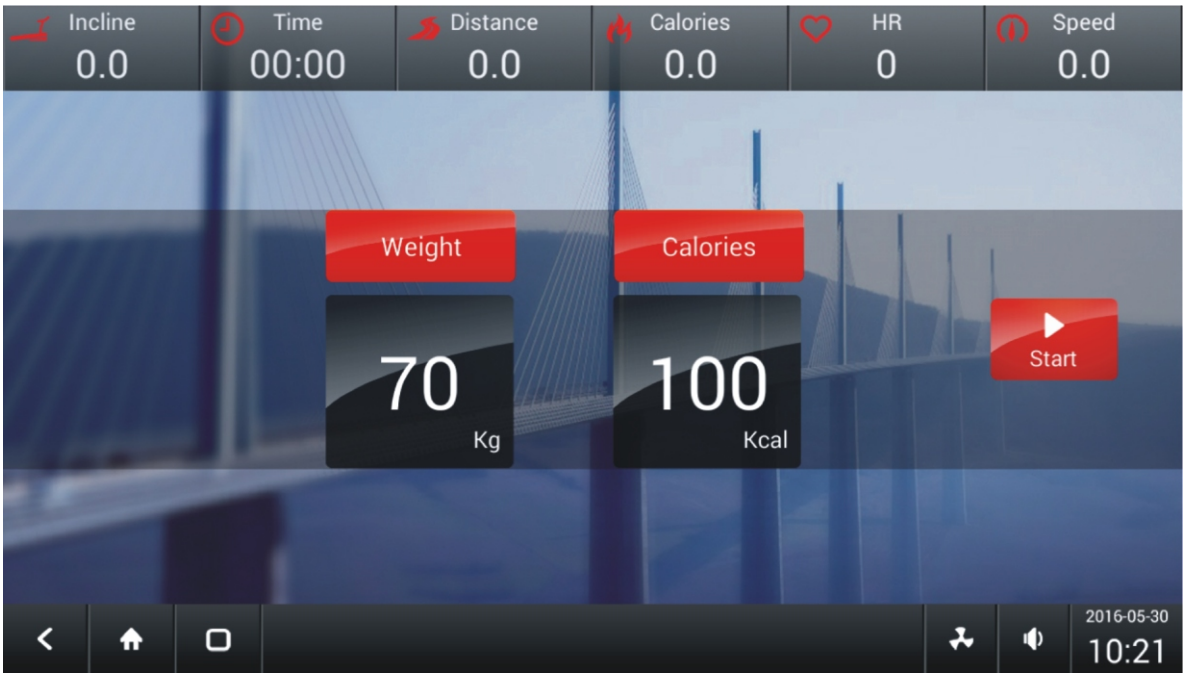


Press the red 'Start' button to start CARDIO mode training as figure.

## 4. Language setup

Press the language button in the right side of the main page---Figure 1.1,We will enter language setup function. Here is the interface.

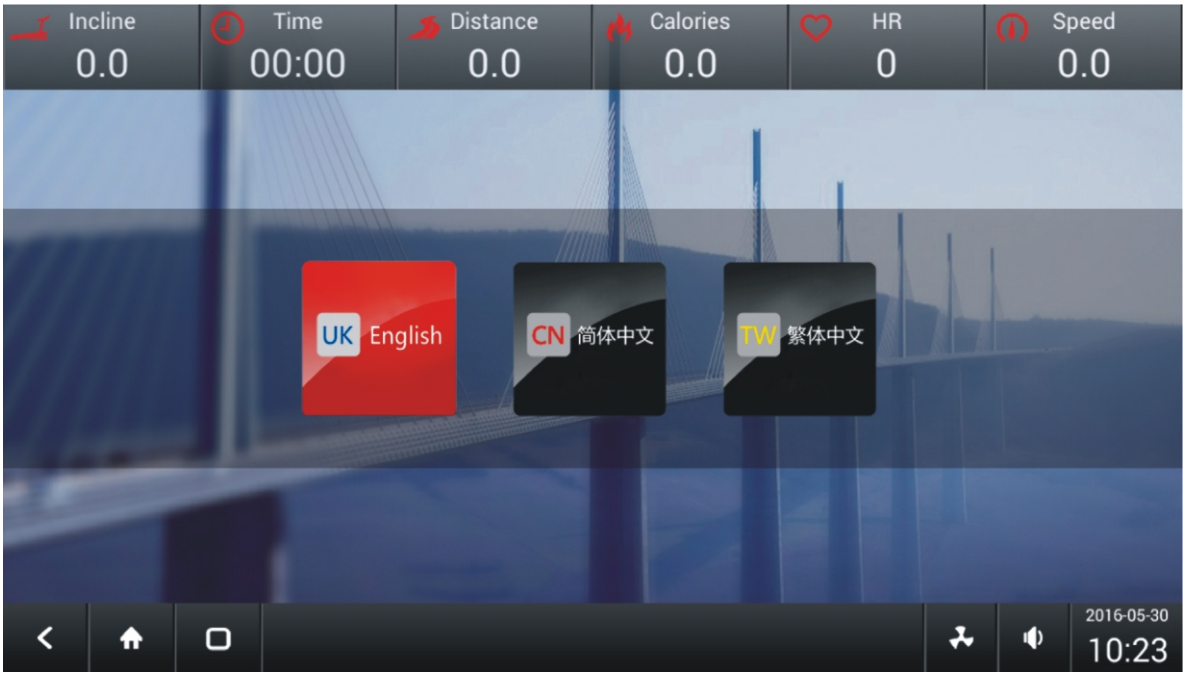

## 5. Profile setup

Press the profile button in the right side of the main page---Figure 1.1,We will enter profile setup function. Here is the interface.

## 6. Browser

Press the 'internet' button in the right side of the main page---Figure 1.1,you can access the internet when you are training. Here is the interface.

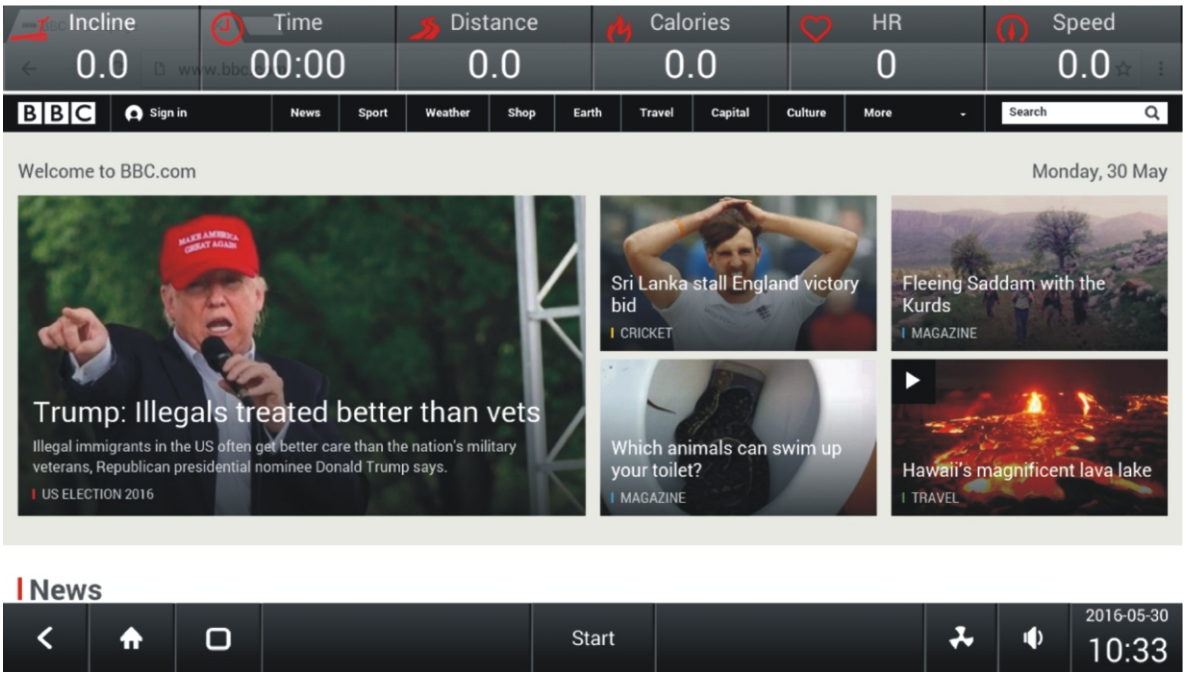

You can use the 3rd button on the bottom bar to see the full page as follow.

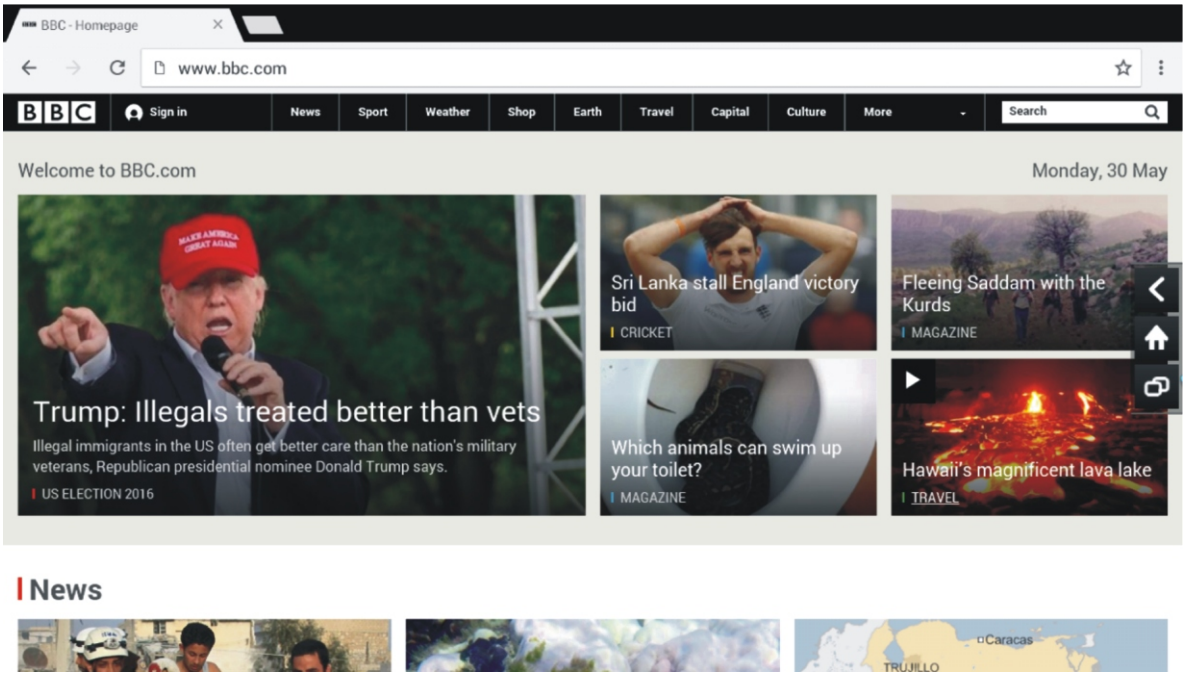


And press the 3rd button on the right bar will bring the top and bottom bar back.

## 7. Entertainment function

You can use the 'AV-Input', 'HDMI' and 'Multimedia' button in the right side of the main page---Figure 1.1 to call the AV input, HDMI input and multimedia function as follows.

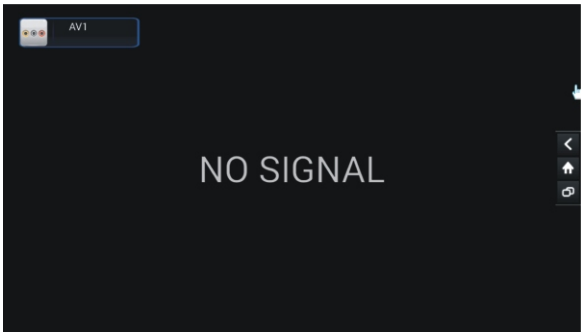

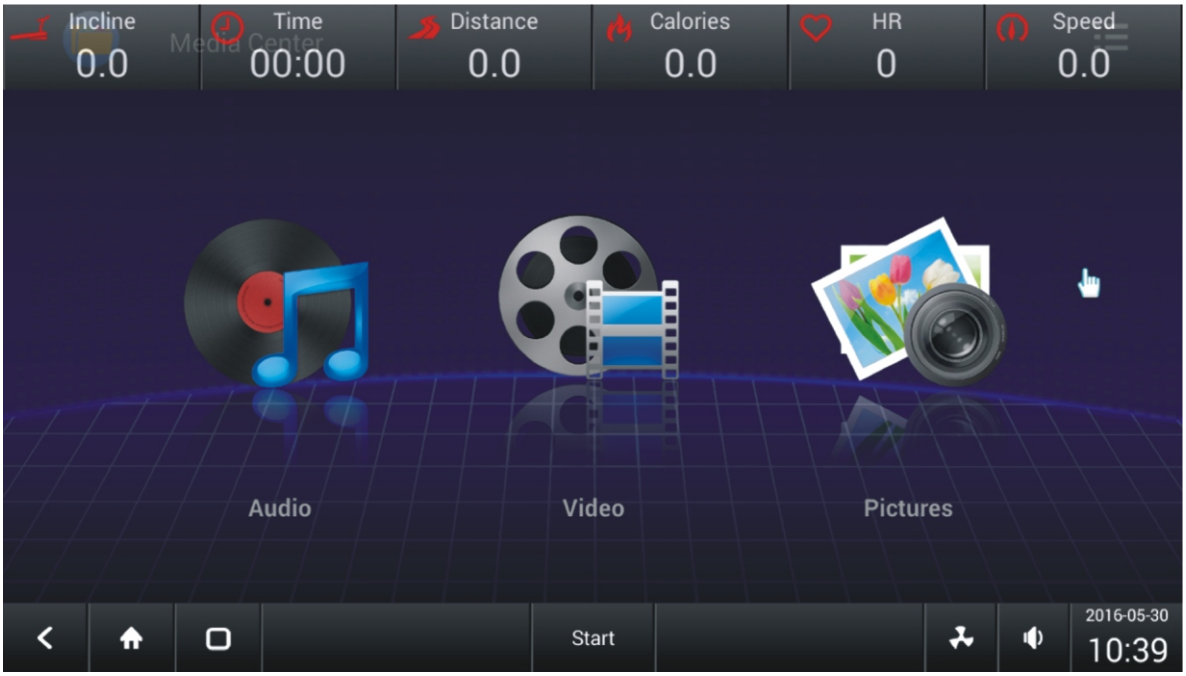


Press the 1st button on the bottom bar or the right bar twice will return from above three mode as follow figure

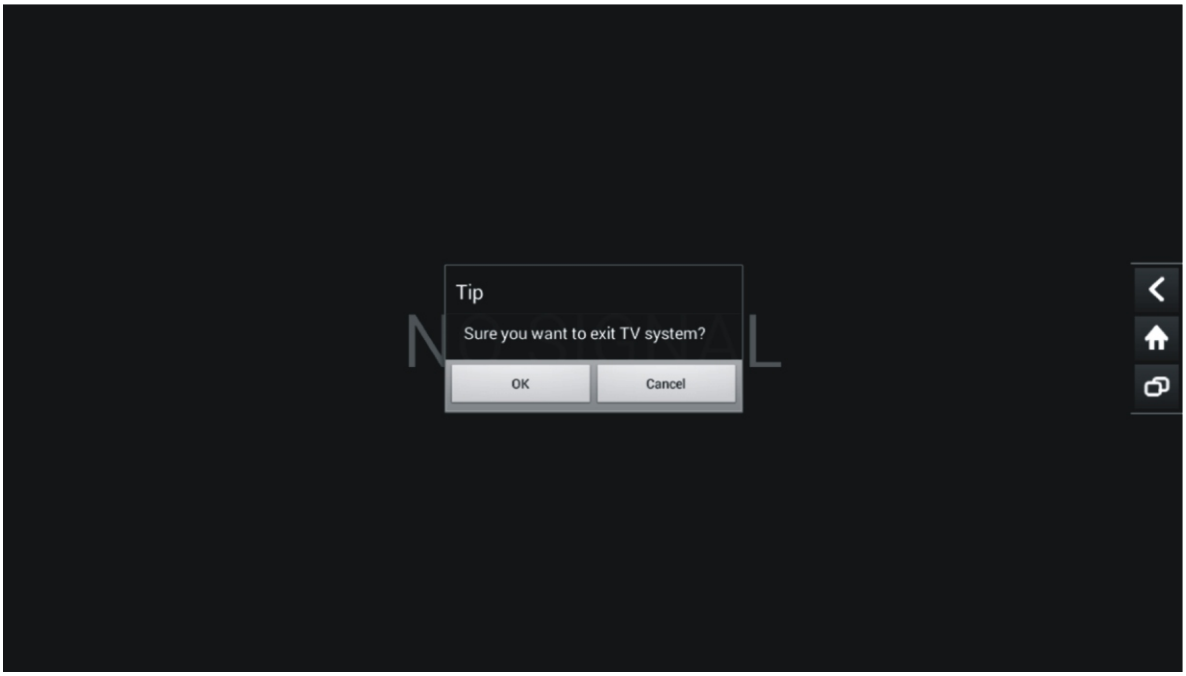

## 8 System setup

Press the setup button in the right side of the main page---Figure 1.1,you will enter setup mode. Here is the interface.

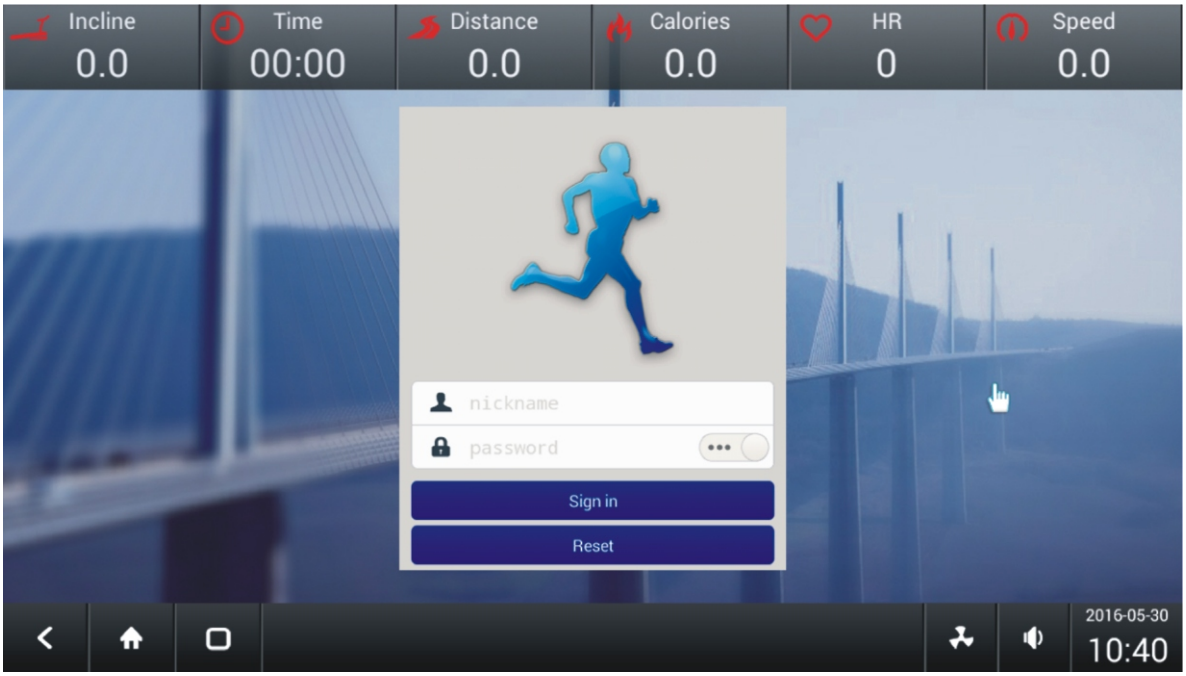


After Login you will see follow interface.

# Console Panel Functions

Press the SETUP button, then you will see follow interface.

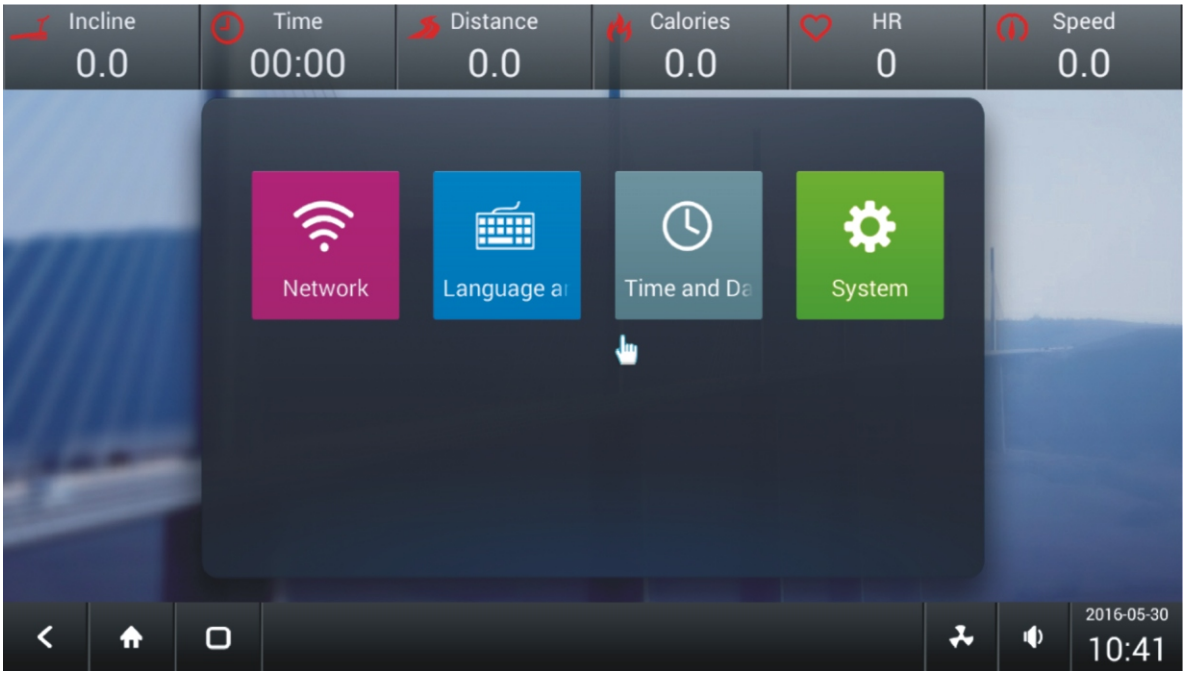


From here you can do some system settings related with network, time and others. When you finish you setup work, please do logout and then you can do your training program again.

# Troubleshooting Guide

| Malfunction | Corrective Action |
|---|---|
| ER01, Communication Error | 1. Check console and the main communication cable connection. |
| | 2. Check inverter and the main communication cable connection. |
| | 3. Replace inverter. |
| | 4. Replace console. |
| ER02, Elevation Error | 1. Elevation auto. Sense mode. |
| | 2. Connection check. |
| | 3. Elevation control PCB LED check. |
| | 4. actuator check or replace. |
| ER03, Red stop key abnormal | 1. Check the mechanical structure. |
| | 2. Connection check. |
| | 3. Stop key check or replace. |
| | 4. Console PCB check or replace. |
| | 5. Communication board check or replace. |
| ER04, Over current | 1. Connection check. |
| | 2. Lubrication. |
| | 3. Running deck check. |
| | 4. Running belt check. |
| | 5. Check if overload. |
| | 6. Main motor check or replace. |
| | 7. Inverter check or replace. |
| ER05, Lower voltage | 1. Check power AC 220-240V. |
| | 2. Check if overload. |
| ER06, Over load | 1. Motor connection check. |
| | 2. Lubrication. |
| | 3. Running deck check. |
| | 4. Running belt check. |
| | 5. Overload. |
| | 6. Main motor check or replace. |
| | 7. Inverter check or replace. |
| ER07, Emergency stop | 1. Reset safety switch. |
| | 2. Check the mechanical structure. |
| | 3. Connection check. |
| | 4. Safety switch check or replace. |
| | 5. Console PCB check or replace. |
| The console no power | 1. Check the power voltage by using voltage-meter to see if it is within 220-240V. |
| | 2. The switch is turned to the "ON" position, If the switch light isn't lit, replace the switch. |
| | 3. Inspect the circuit breaker to see if it has tripped off. If it is tripped off, reset the breaker. And check which part is short-circuited. Then replace the short-circuited part. |
| | 4. Check the power cable. |
| | 5. Check the adaptor. |
| | 6. Check the communication cable. |

# Electrical Connection

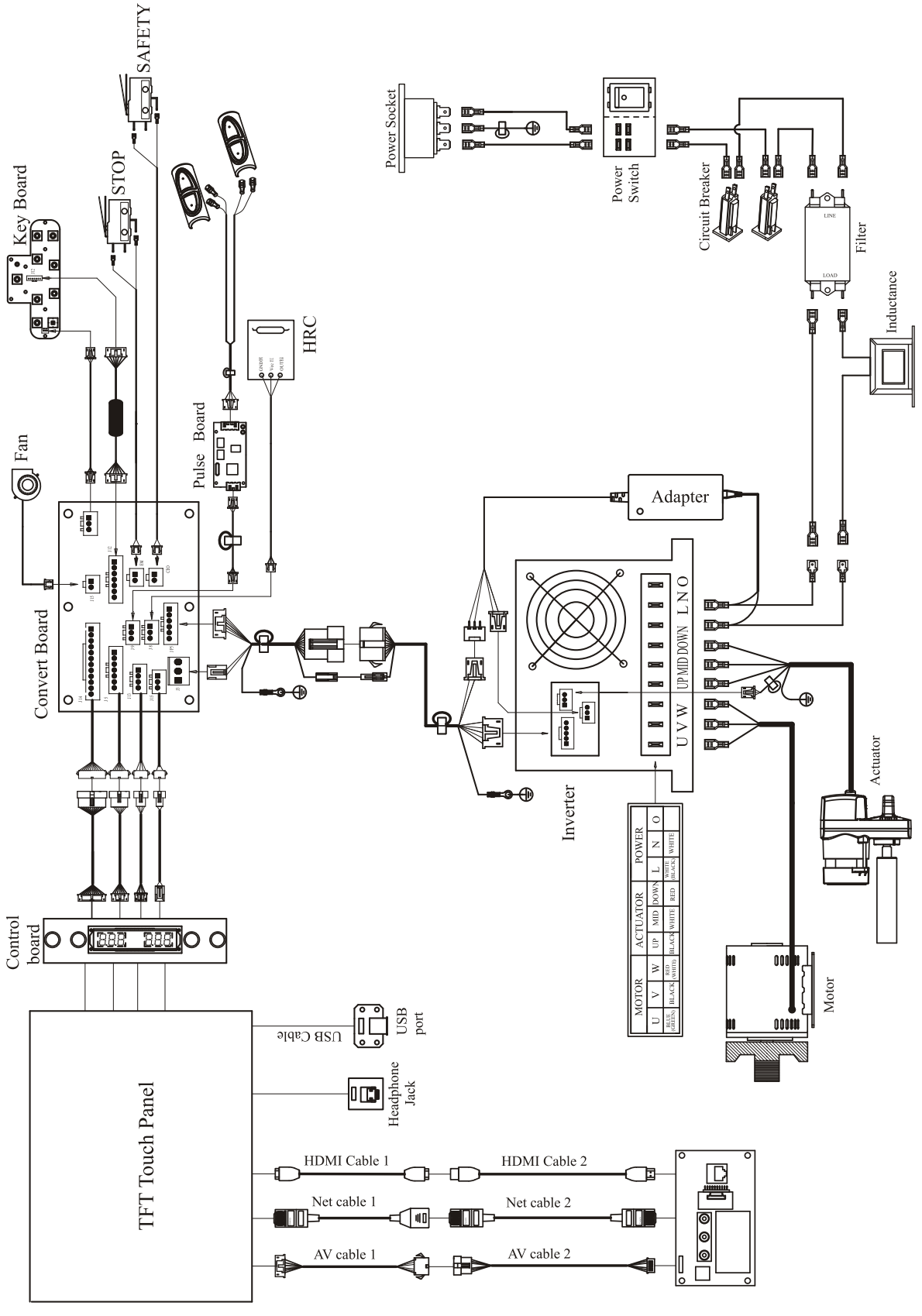

# Belt Adjustment and Maintenance

## 1. Running Belt Adjustment

### Caution

**Over-tightening of the roller will severely shorten the life of the running belt and may cause further damage to other components** (such as Roller, Motor etc.).
**Speed of Running Belt don't exceed 4KMH, during adjustment.**

### 1.1 Adjust Running Belt in center of treadmill

Running belt is possible off normal while using for period of time or just use a new treadmill, solution of two situations are as following:

**A. Running belt is deviation to right**

Tension (Clockwise direction) right bolt or loose (Anticlockwise direction) left bolt of rear roller with a 6mm Allen wrench as below figure.

**B. Running belt is deviation to left**

Tension left bolt or loose right bolt of rear roller with a 6mm Allen wrench as below figure.

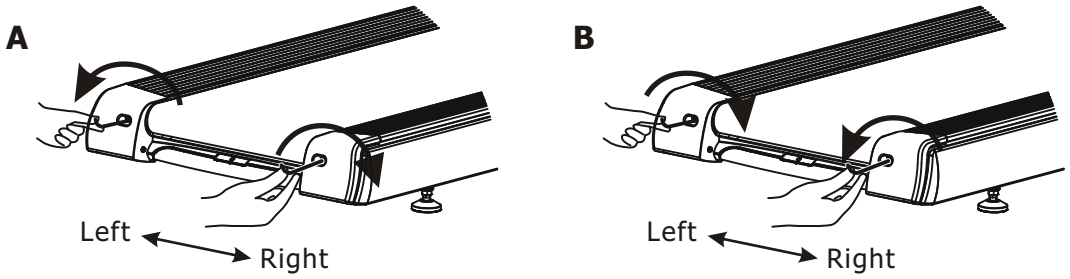


### 1.2 Running Belt tension

When you plant your foot on the belt, if you can feel a slipping sensation then the belt has been stretched and is slipping across the rollers, which is a normal and common adjustment is needed on a new treadmill or using for period of time. Tension both the Allen bolts of rear roller **1/4 TURN** as below figure to eliminate this slipping. Try the treadmill again to check for slipping. Repeat if necessary, but **NEVER TURN the roller bolts more than 1/4 turn at one times.**
**Perfect tension of running belt is 0.9~1.1 lbs.**

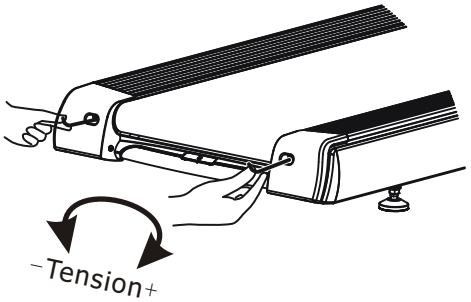


## 2 CLEANING

**Warning! To prevent electrical shock, be sure the power is turn off and disconnect plug from socket before attempting any cleaning or mainteance.**

Routine maintenance and cleaning for your unit will keep good function and extend the life of your unit.
Plesse wipe off the console and other treadmill surfaces perspiration and dust with a clean, dampened soft cloth after workout.

## 3. LUBRICATION

It is recommended that the walking board be checked peridically (around 3 months) for lubrication to ensure optimal treadmill performance.
Using hex lift the belt and insert the silicone about 20 gram to spray smoothly (adjust belt without slipping after lubrication).

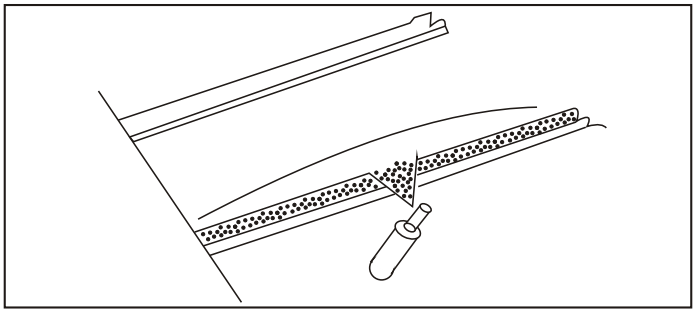

## PREVENTIVE MAINTENANCE SCHEDULE

## TREADMILL

| *Item* | *Daily* | *Weekly* | *Monthly* | *Quarterly* | *Biannual* | *Annual* |
|---|---|---|---|---|---|---|
| *Mounting Bolts* | | | | | Inspect | |
| *Frame* | Clean | | | | Inspect | |
| *Power Cord* | | | Inspect | | | |
| *Display Console* | Clean | | Inspect | | | |
| *Handrail & Handlebar* | Clean | | | Inspect | | |
| *Front Roller* | | | | Clean | Inspect | |
| *Rear Roller* | | | | Clean | Inspect | |
| *Emergency Button* | Test | | | | | |
| *Running belt Tension* | | | Inspect | | | |
| *V Belt* | | | | Clean | Inspect | |
| *Lubricator Reservoir and filter element* (for including the structure of the product) | | | Inspect | | Clean | |
| *Running Deck* | | | Re-Lubricating and inspect | | | Flip (not include AC2970C) |
| *Running Belt* | | | | | Inspect | |
| *Control Box* | | | | | Clean (Vacuum) | |
| *Motor* | | | | Clean | | |

SYSTEM CERTIFICATION
ISO 9001
SGS
SYSTEM CERTIFICATION
ISO 14001
SGS
SYSTEM CERTIFICATION
OHSAS 18001
SGS
SYSTEM CERTIFICATION
ISO 10015
SGS